Model Name:GA-G41MT-S2P-ME

Revision 1.31

SHEET	TITLE
01	COVER SHEET
02	BLOCK DIAGRAM
03	BOM & PCB MODIFY HISTORY
04	P4_LGA775_A
05	P4_LGA775_B,D
06	P4_LGA775_C
07	P4_LGA775_E,F,G,H
08	G41_HOST
09	G41_DDRII
10	G41_PCI E, DMI
11	G41_VGA
12	G41_GND
13	G41_PWR
14	PCI EXPRESS*16 SLOT
15	DDR3 CHANNEL A
16	DDR3 CHANNEL B
17	DDR3 TERMINATION
18	ICH7 PCI, USB, DMI, LAN
19	ICH7 IDE, GPIO, SATA, CTRL
20	ICH7 VCC, GND
21	CK505 CLOCK.
22	PCI SLOT 1,PCIE*1,2
23	IDE/FLOPPY/F_USB/R_USB
24	ITE 8718 GB
25	COM_LPT
26	CI,HWM,KB/MS,DUALBIOS
27	VIA VT2021

SHEET	TITLE
28	REAR AUDIO JACK
29	DISCRETE POWER
30	VCORE PWM_ISL6312
31	ATX, OTHERS POWER
32	FRONT PANEL
33	ARTHEROS AR8151

CONFIDENTIAL

BLOCK DIAGRAM

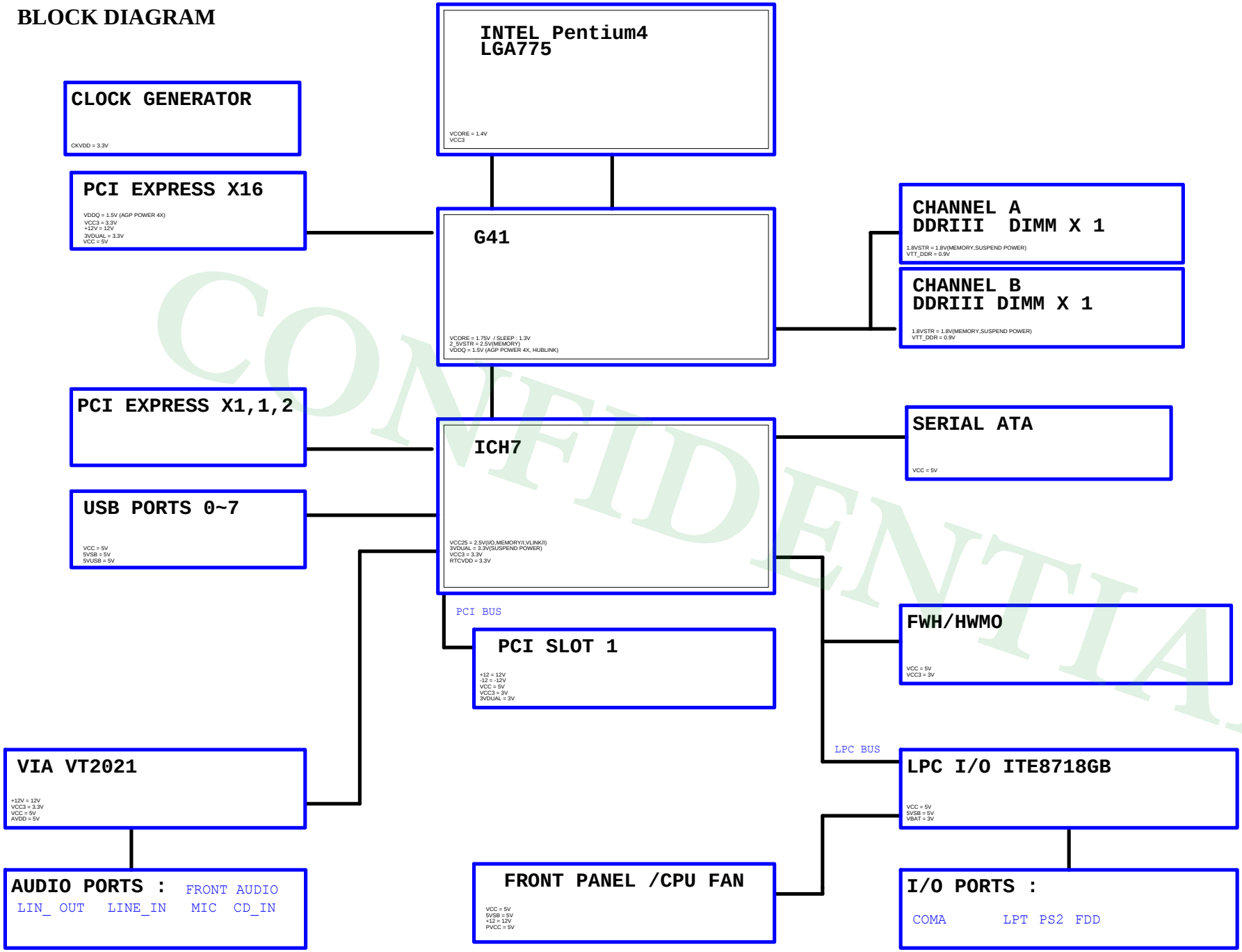

CONFIDENTIAL

Gigabyte Technology		
Title: BOM & PCB MODIFY HISTORY		
Size: Custom	Document Number: GA-G41MT-S2P-ME	Rev: 1.31
Date: Monday, February 14, 2011	Sheet 2 of 33	

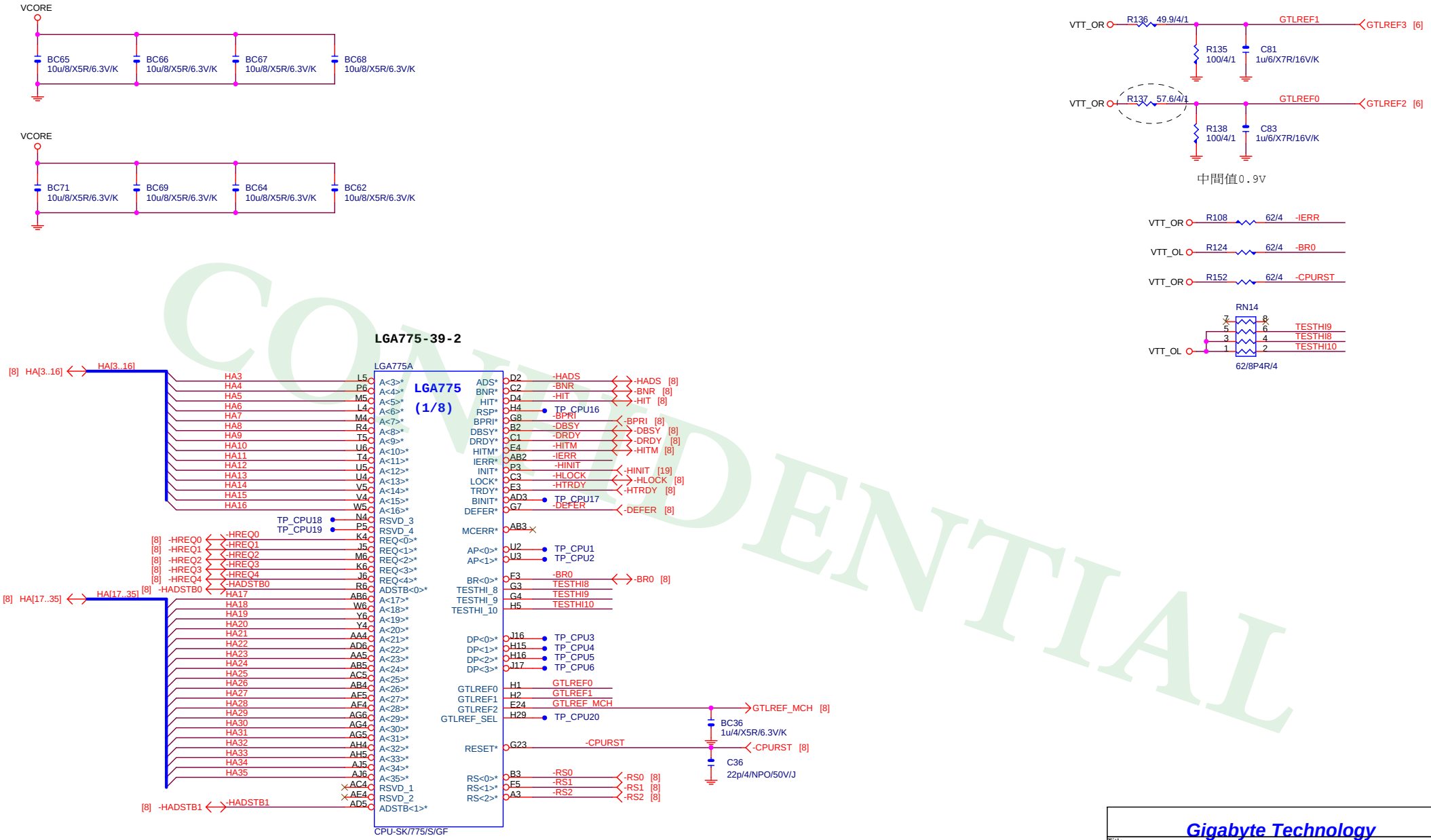

CONFIDENTIAL

Gigabyte Technology			
Title	P4_LGA775-A		
Size B	Document Number GA-G41MT-S2P-ME		Rev 1.31
Date: Monday, February 14, 2011	Sheet 4 of 33		

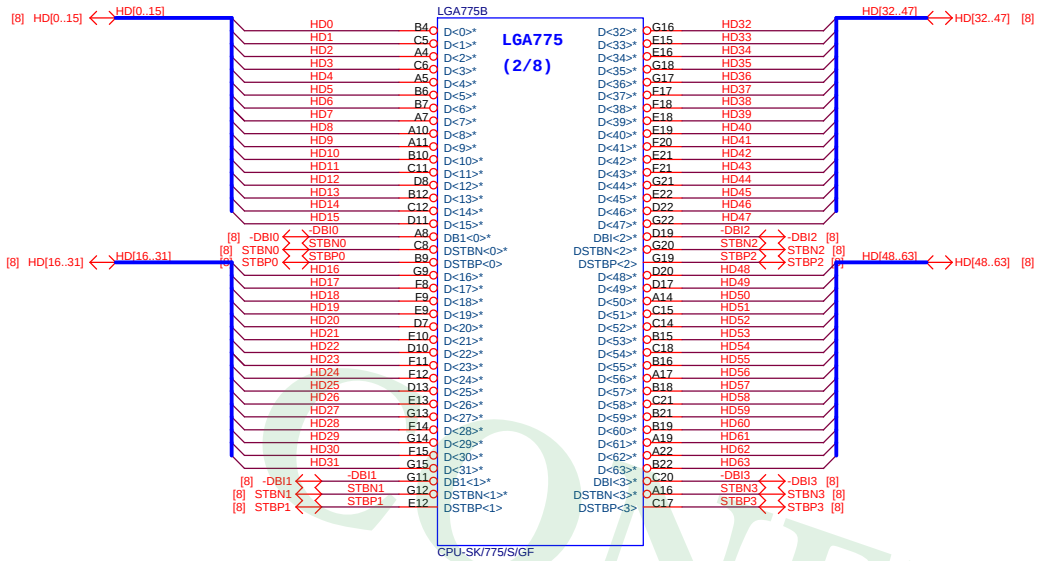

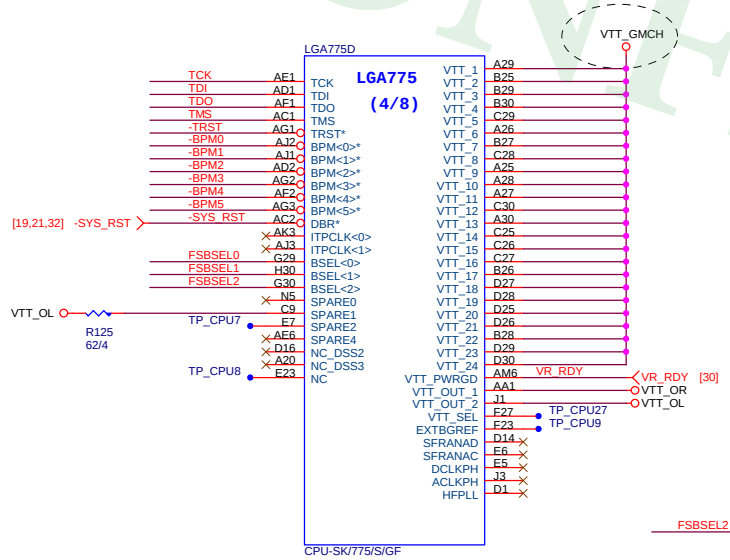

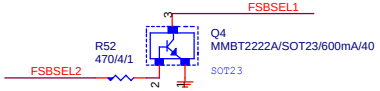

FIX FSB1600 LATCH FAIL

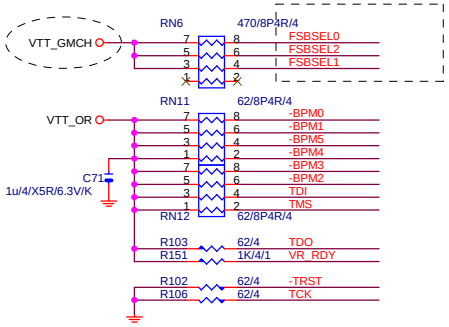

TO CLK GEN

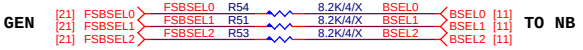

TO NB

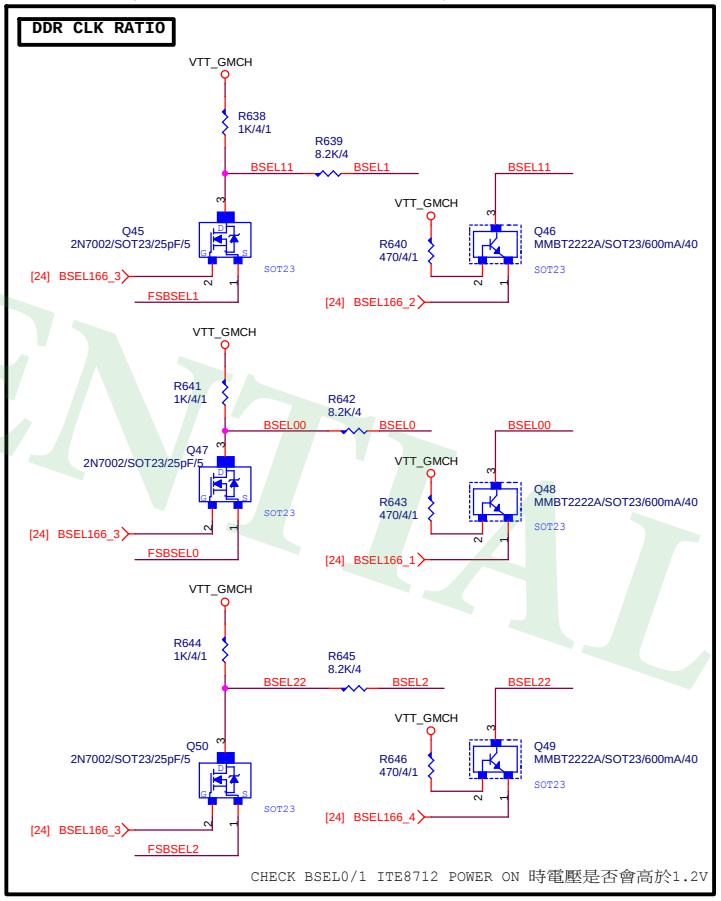

CPU

NA	FSB	FSA		
FSBSEL3	FSBSEL1	FSBSEL0	Clock	
1	0	1	100MHz	X
0	0	1	133MHz	
0	1	1	166MHz	
0	1	0	200MHz	
0	0	0	266MHz	

CONFIDENTIAL

Gigabyte Technology			
Title	P4_LGA775-B,D		
Size Custom	Document Number	GA-G41MT-S2P-ME	Rev 1.31
Date: Monday, February 14, 2011	Sheet 5 of 33		

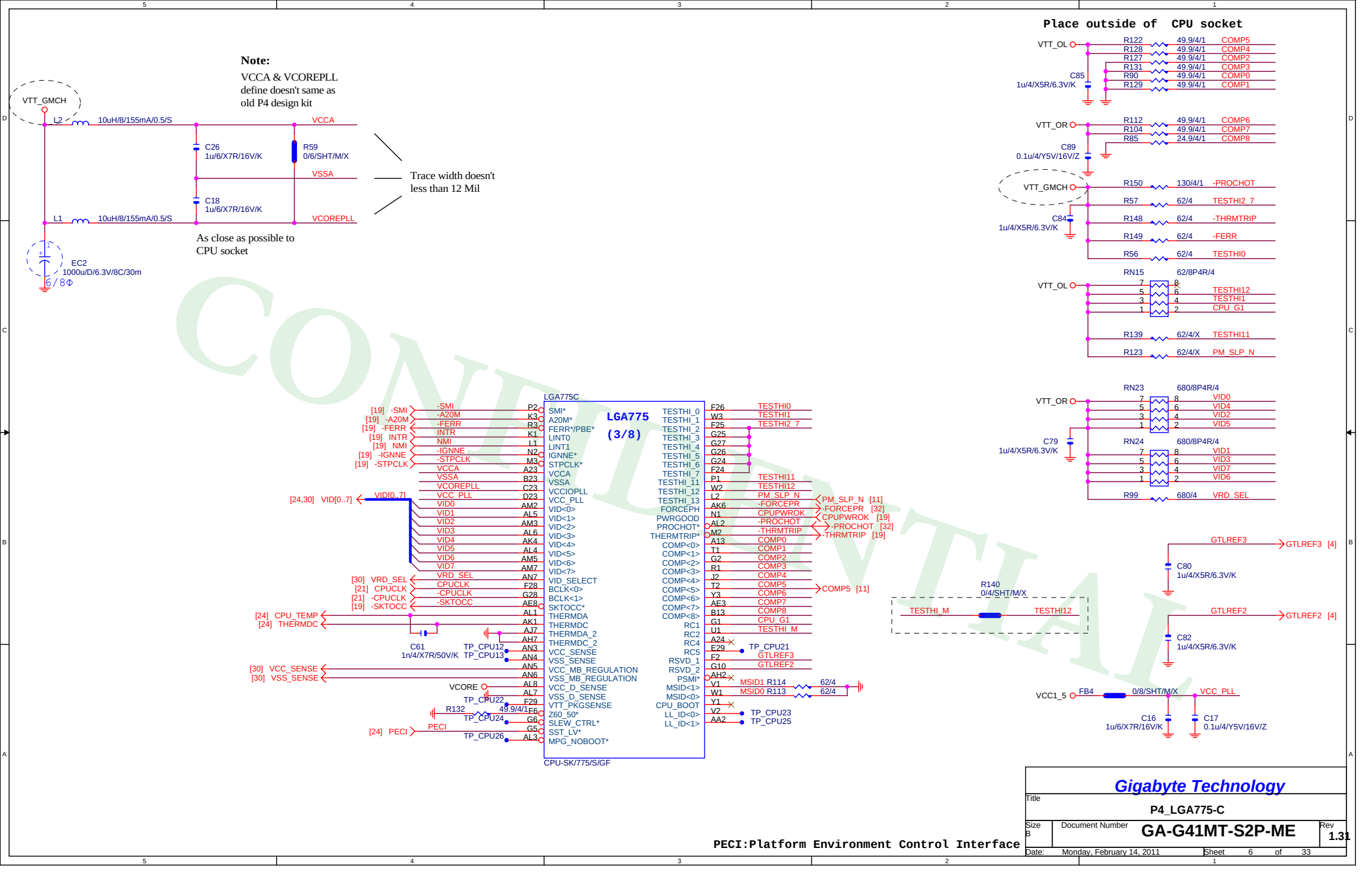

CONFIDENTIAL

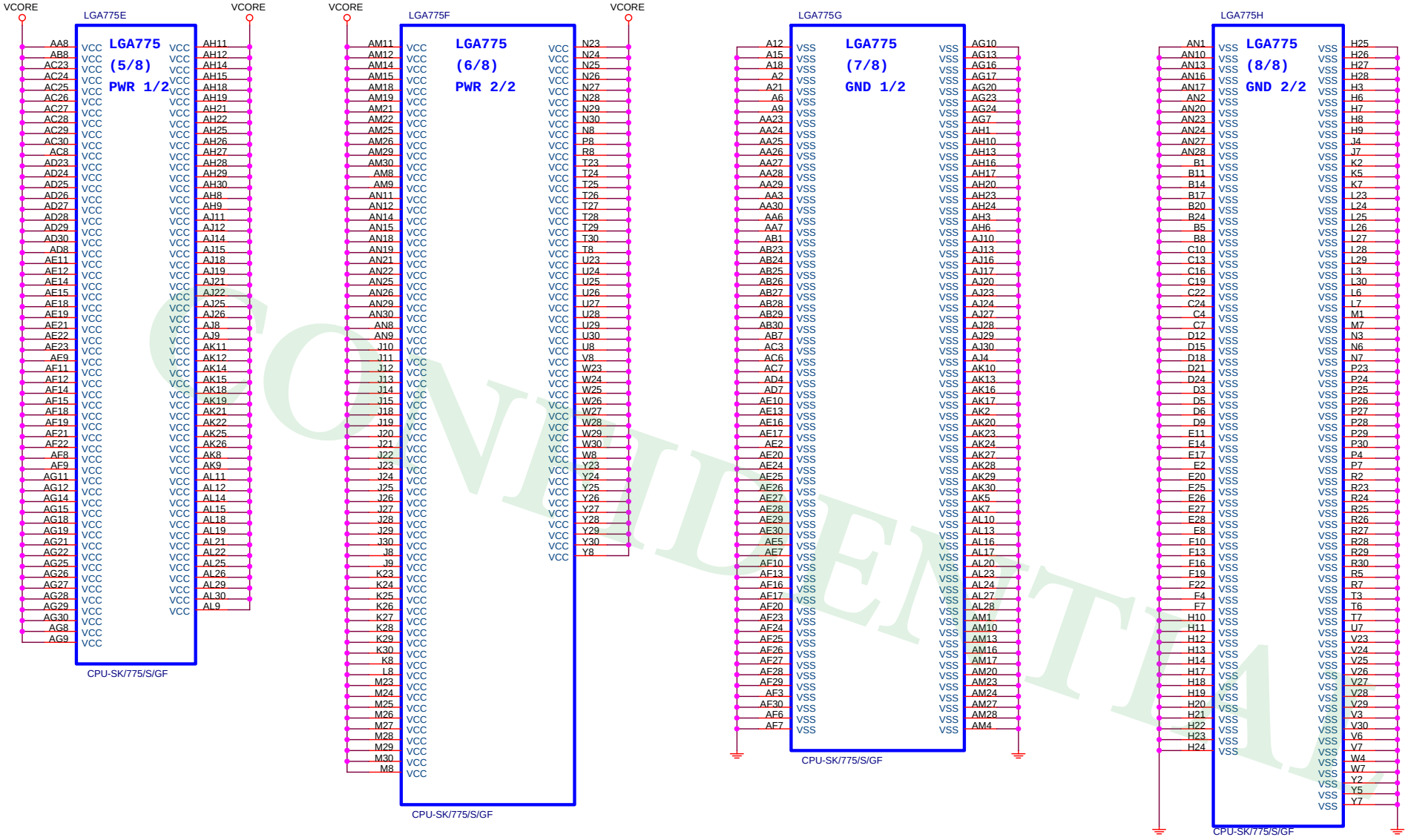

CONFIDENTIAL

Gigabyte Technology

Title	P4_LGA775-E,F,G,H	
Size B	Document Number GA-G41MT-S2P-ME	Rev 1.31
Date: Monday, February 14, 2011	Sheet 7 of 33	

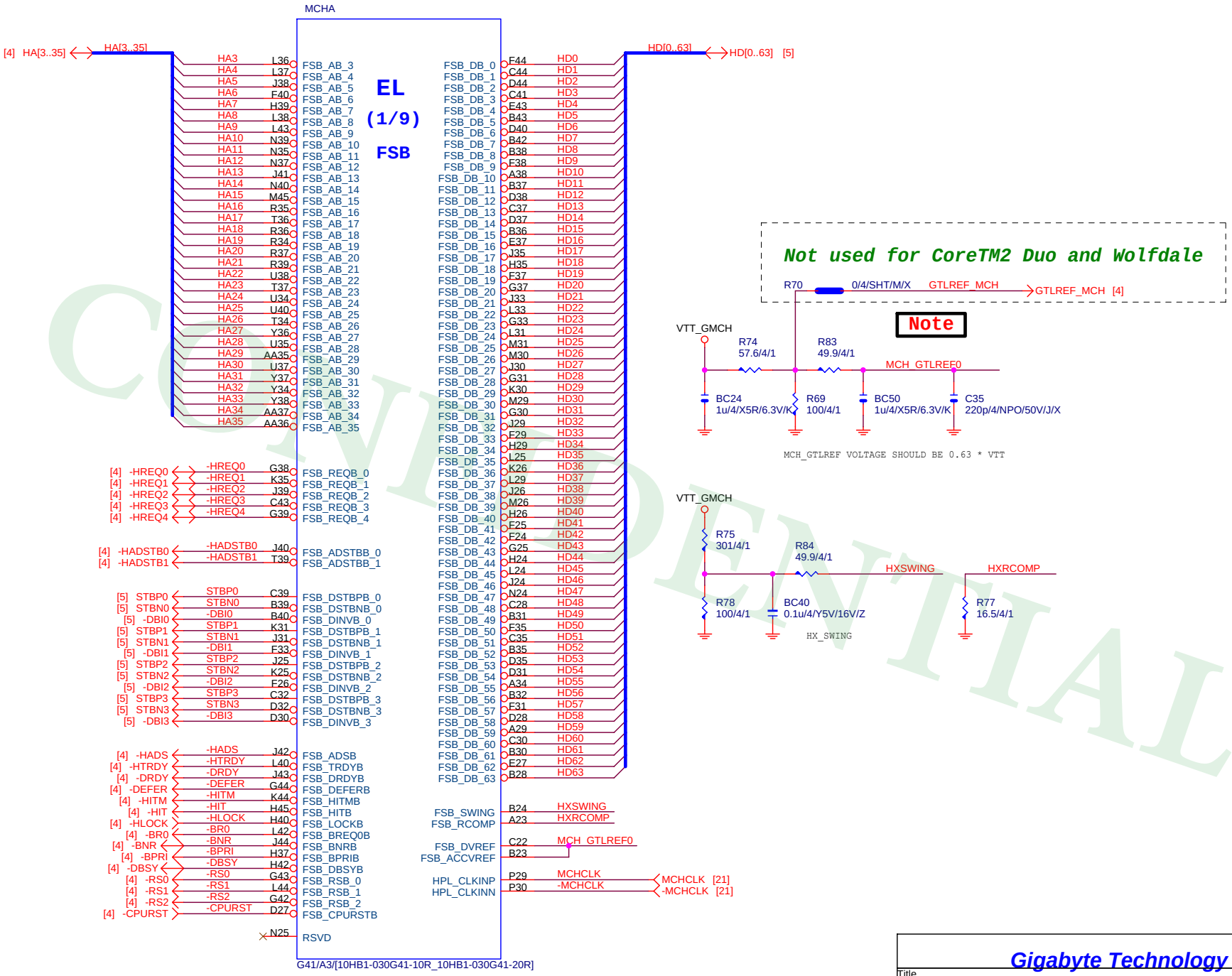

CONFIDENTIAL

Gigabyte Technology			
Title	GMCH-HOST		
Size Custom	Document Number GA-G41MT-S2P-ME		Rev 1.31
Date: Monday, February 14, 2011	Sheet 8 of 33		

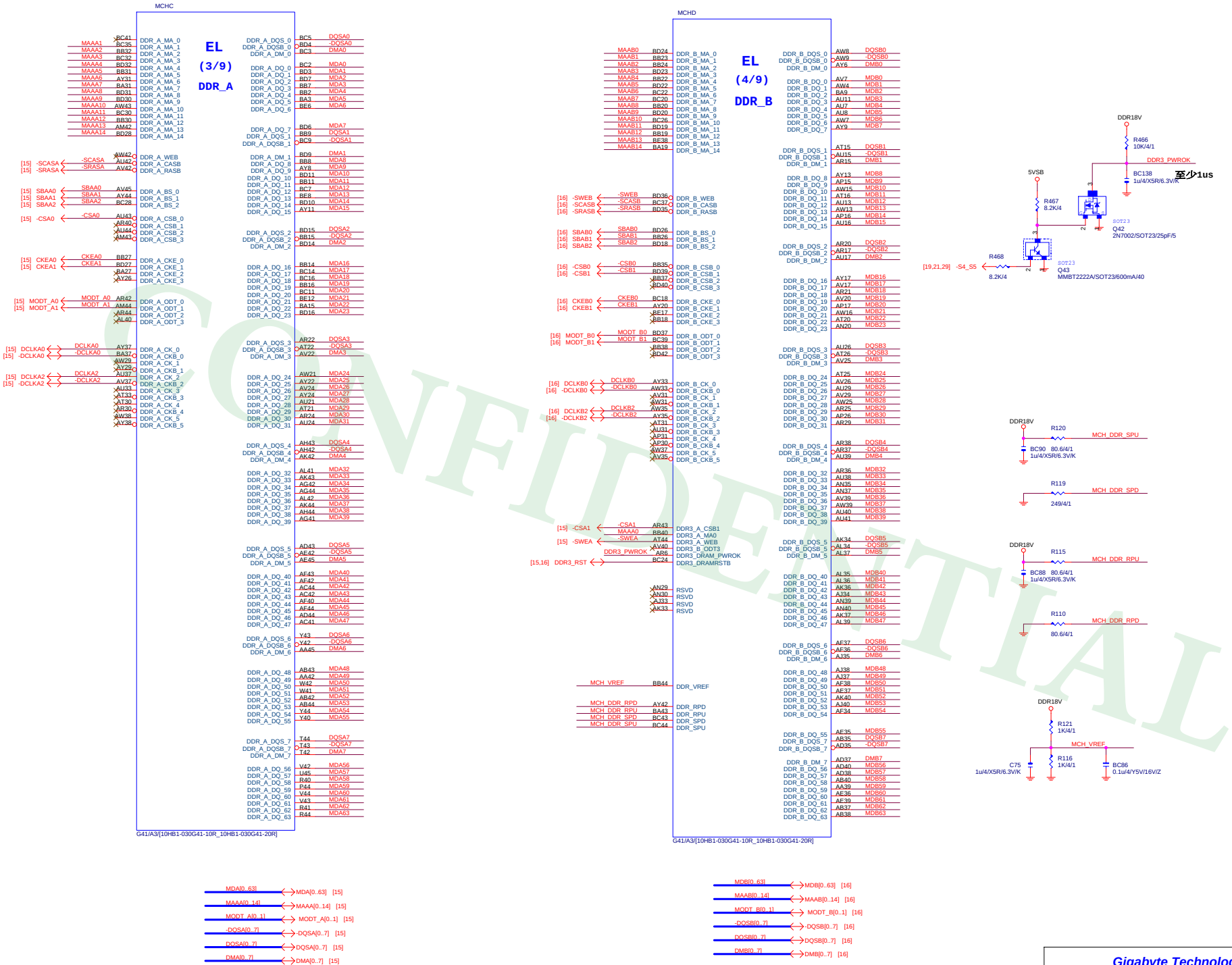

CONFIDENTIAL

Gigabyte Technology			
Title	GMCH-MEMORY		
Size C	Document Number GA-G41MT-S2P-ME		Rev 1.31
Date: Monday, February 14, 2011	Sheet 9 of 33		

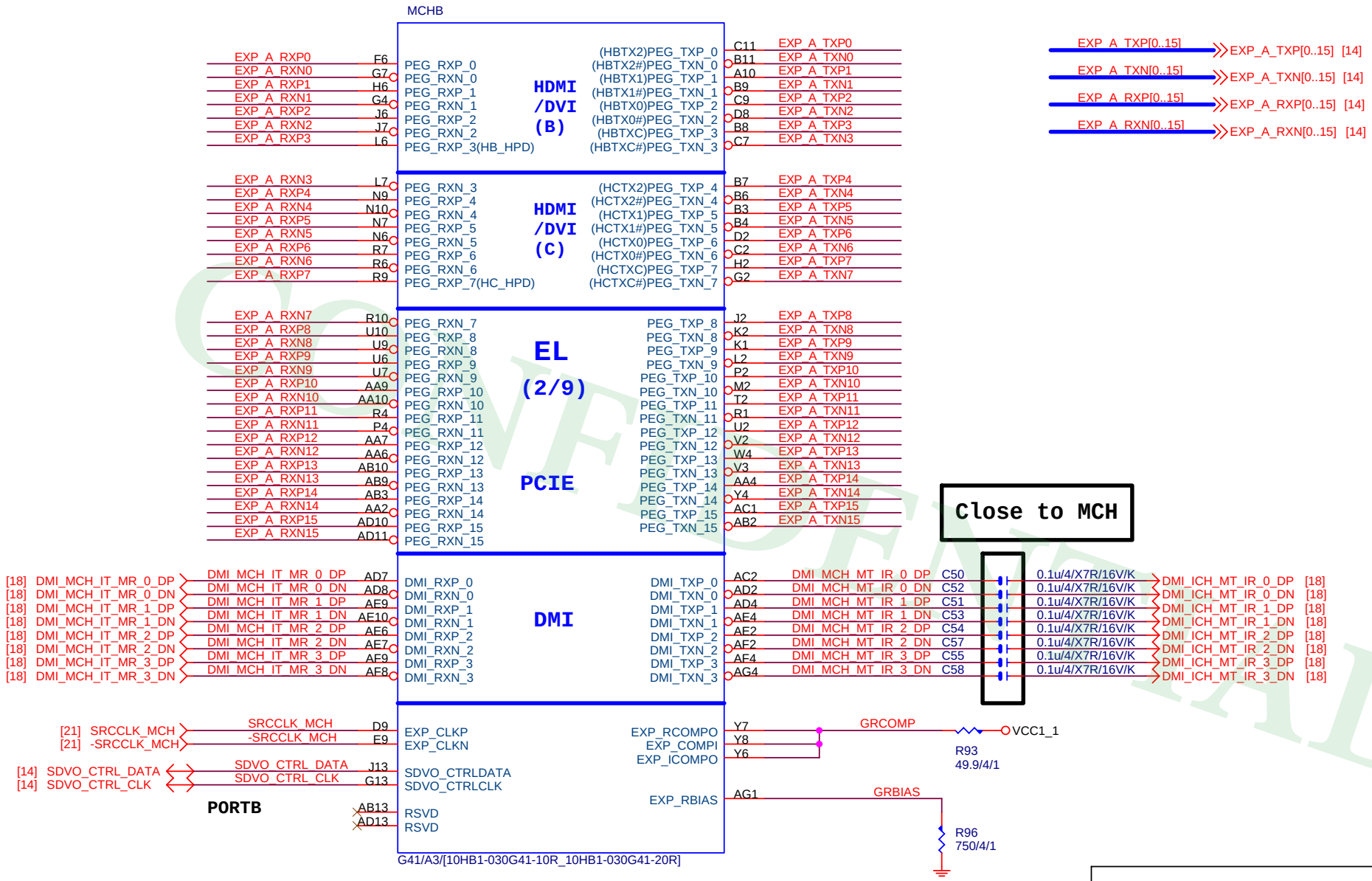

Gigabyte Technology	
Title	GMCH-PCI E & DMI
Size Custom	Document Number GA-G41MT-S2P-ME Rev 1.31
Date: Monday, February 14, 2011	Sheet 10 of 33

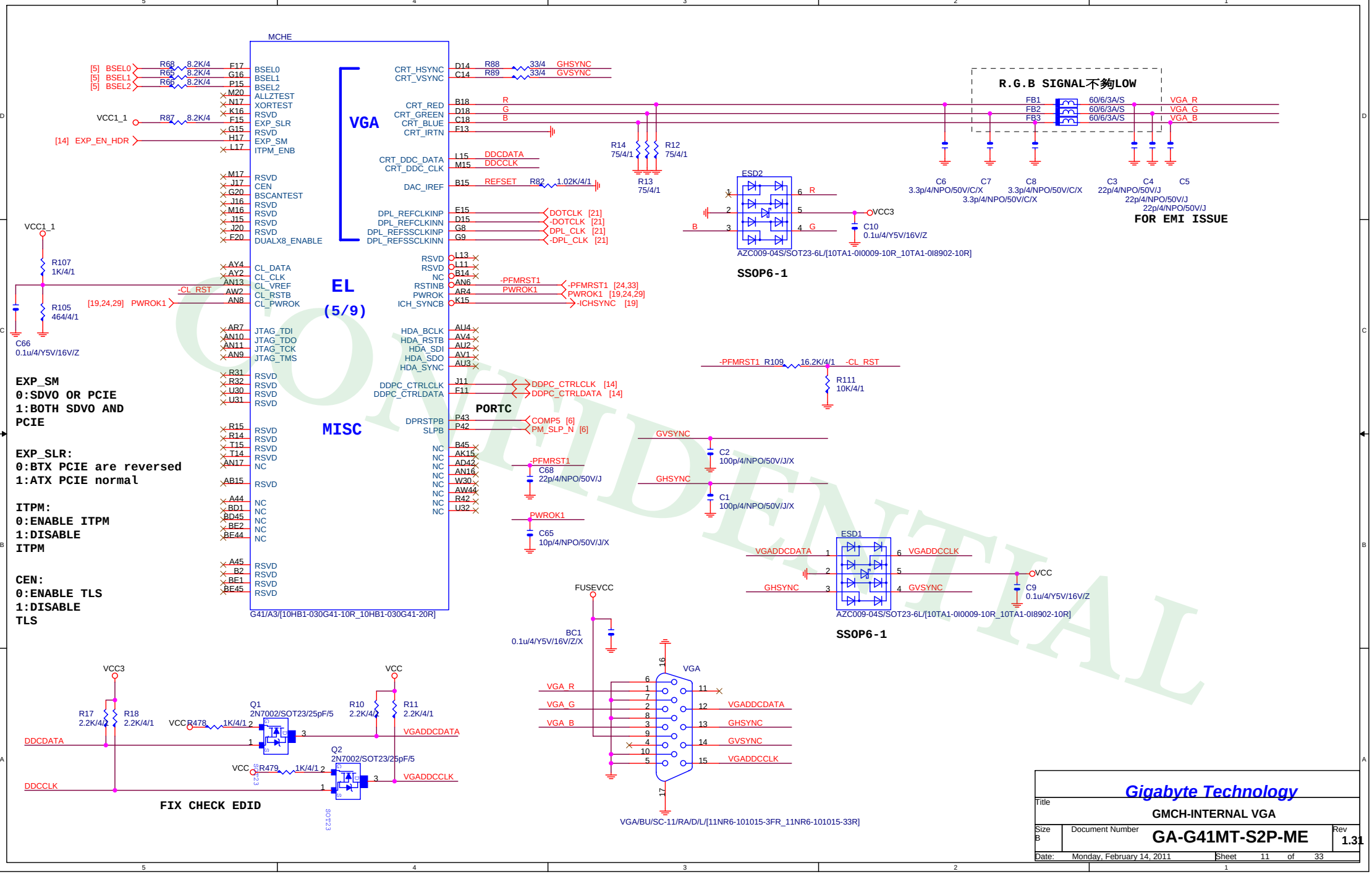

CONFIDENTIAL

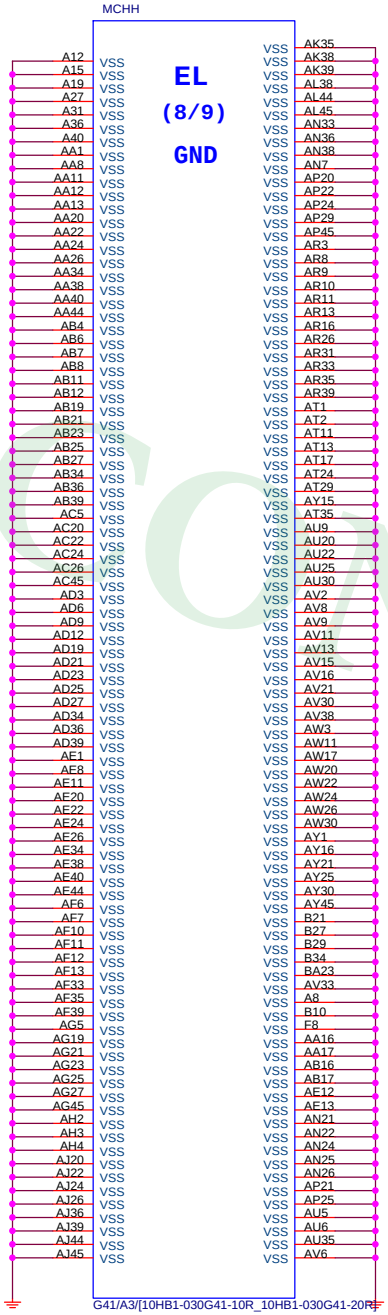

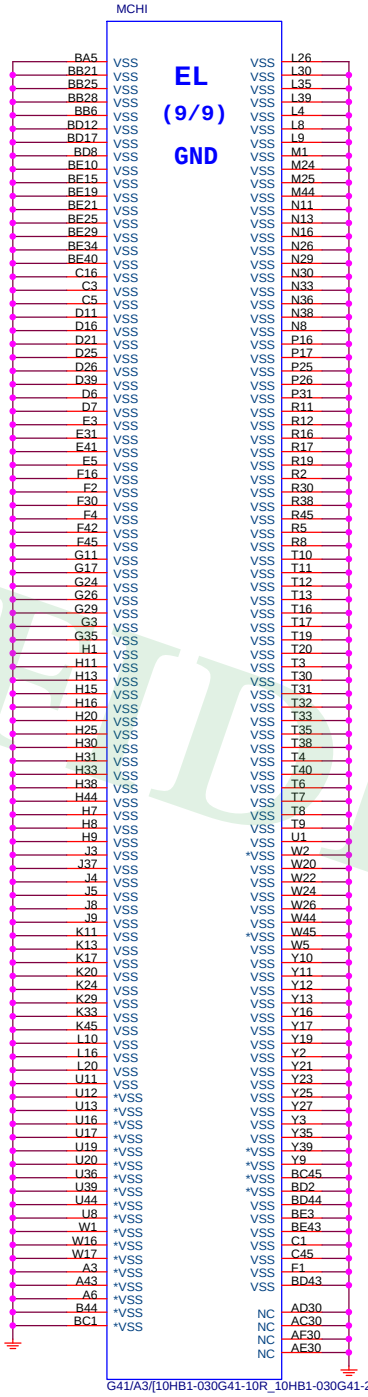

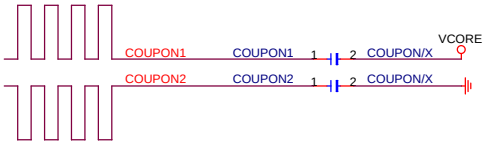

NB_HS
NB_HEATSINK/[12SP2-S04520-01R_12SP2-S04520-02R_12SP2-S04520-03R]

BGASINK445A-L

NEW COST DOWN

CONFIDENTIAL

Gigabyte Technology			
Title	GMCH-GND		
Size Custom	Document Number	GA-G41MT-S2P-ME	Rev 1.31
Date: Monday, February 14, 2011	Sheet 12 of 33		

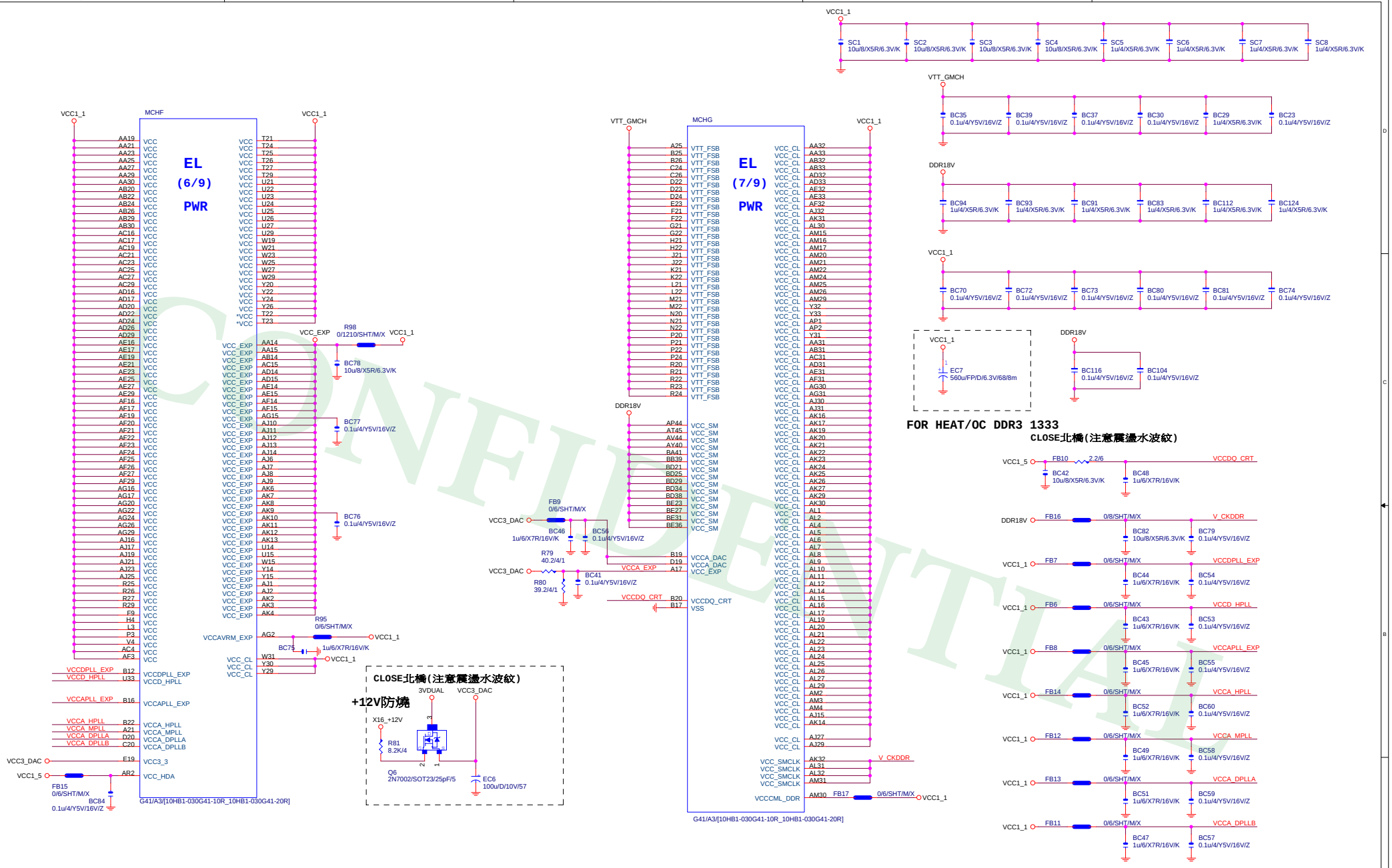

CONFIDENTIAL

Gigabyte Technology			
Title	GMCH-PWR		
Size Custom	Document Number	GA-G41MT-S2P-ME	Rev 1.31
Date: Monday, February 14, 2011	Sheet 13 of 33		

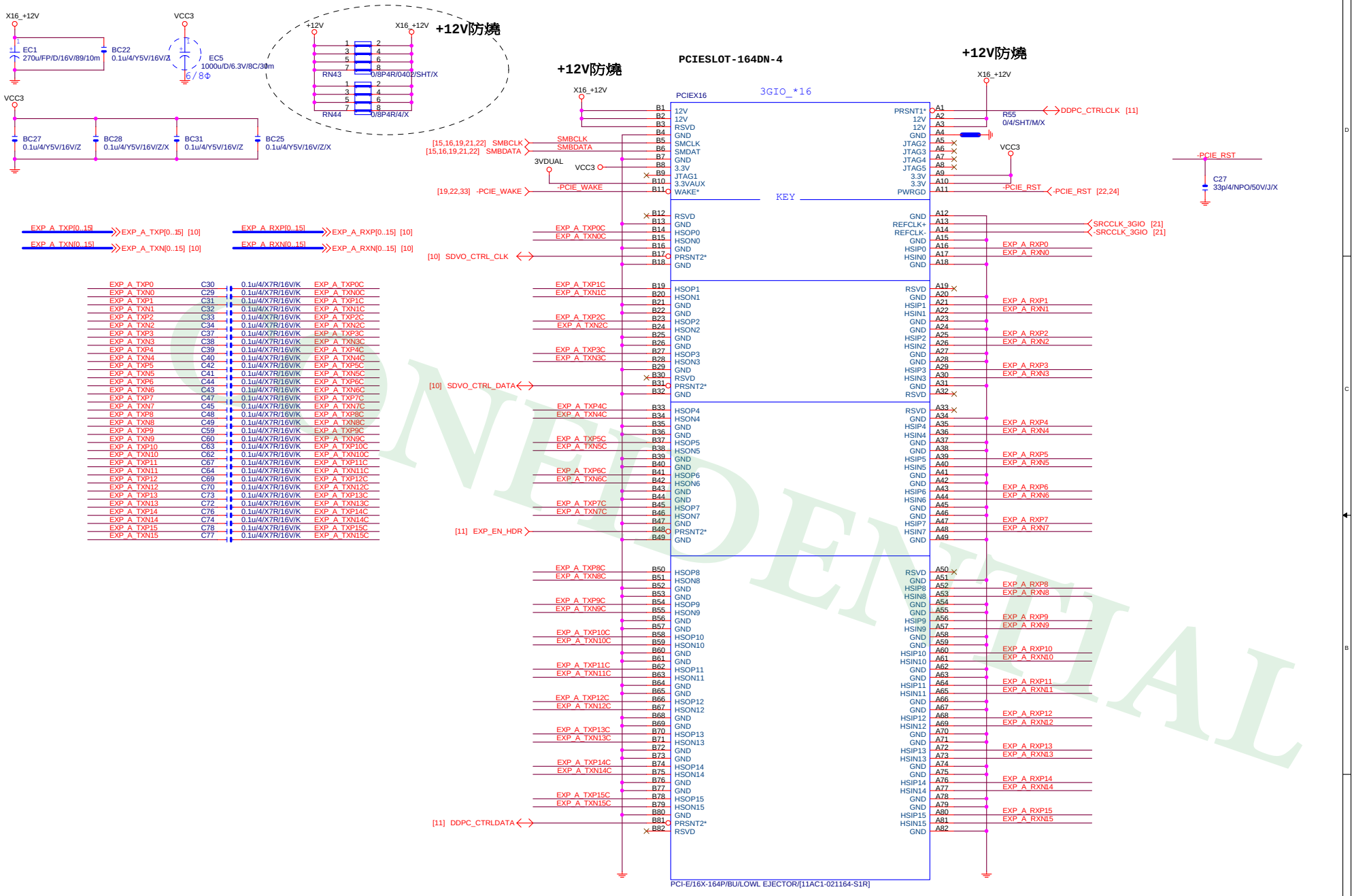

CONFIDENTIAL

Gigabyte Technology	
Title	PCI EXPRESS * 16
Size Custom	Document Number GA-G41MT-S2P-ME
Rev	1.31
Date: Monday, February 14, 2011	Sheet 14 of 33

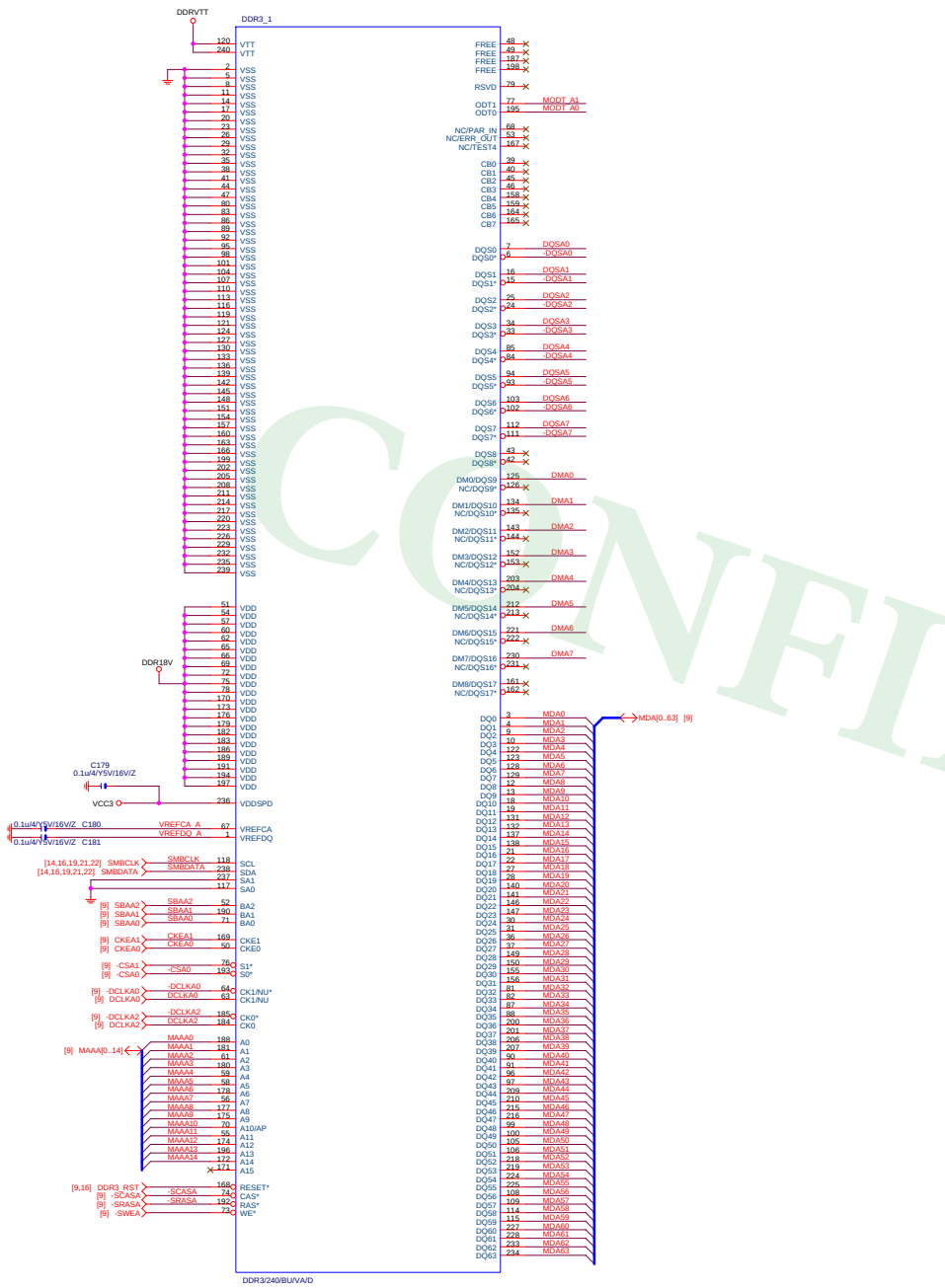

DDR18V

R469 2K/4/1 **tracer min 10/10**

VREFCA_A

R471 2K/4/1

DDR18V

R470 2K/4/1 **tracer min 10/10**

VREFDQ_A

R472 2K/4/1

MODT_A[0..1] MODT_A[0..1] [9]

-DQSA[0..7] -DQSA[0..7] [9]

DQSA[0:7] DQSA[0..7] [9]

DMA[0:7] DMA[0..7] [9]

SMBDATA
SMBCLK

C182 100p/4/NPO/50V/J/X

C183 100p/4/NPO/50V/J/X

CONFIDENTIAL

Title	Gigabyte Technology DDR3 CHANNEL A
Size: Custom	Document Number: GA-G41MT-S2P-ME
Rev	1.31
Date:	Sheet 15 of 33

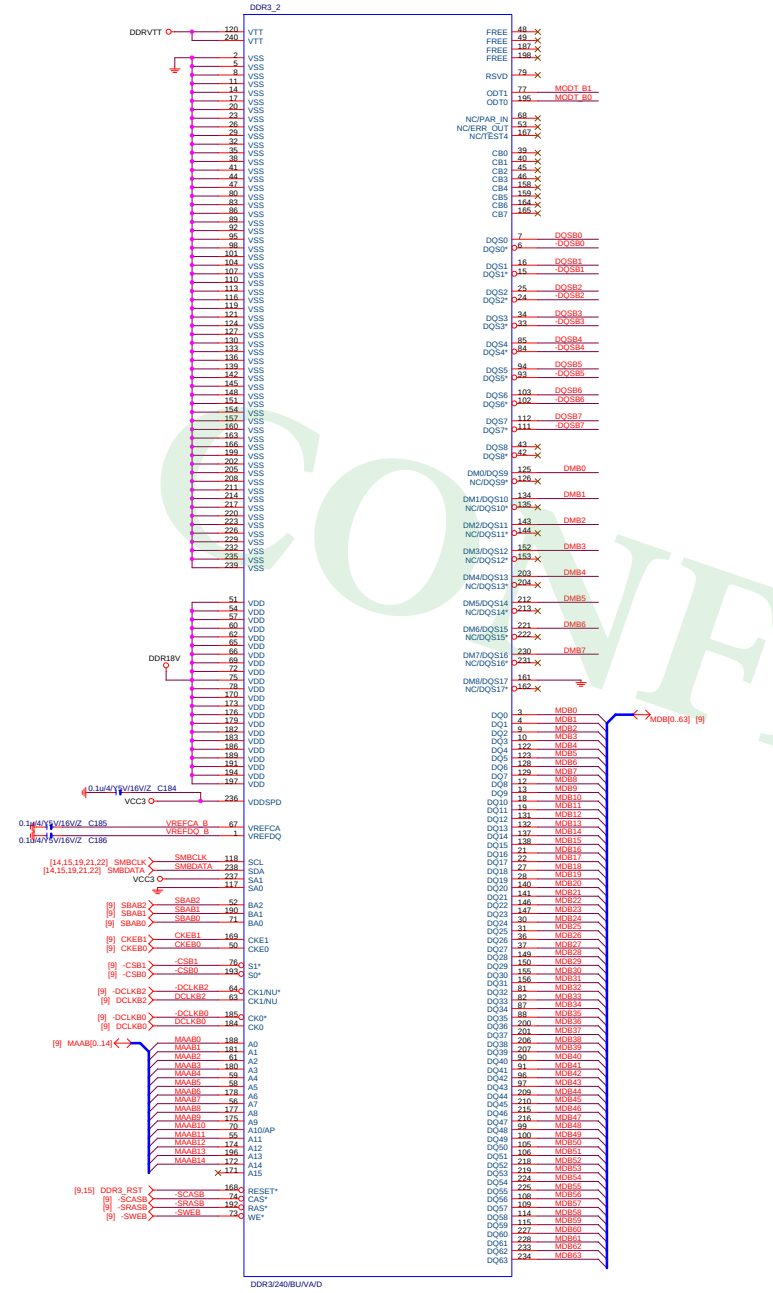

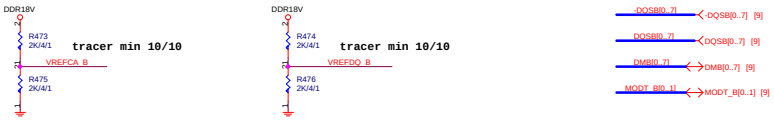

CONFIDENTIAL

Gigabyte Technology		
Title: DDR3 CHANNEL B		
Size: Custom	Document Number: GA-G41MT-S2P-ME	Rev: 1.31
Date:	Sheet 16 of 33	

DDR TERMINATION CHANNEL A

DDR18V Decouple

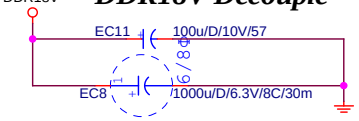

DDRVTT Decouple

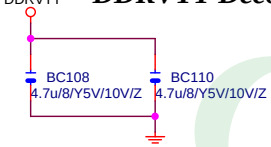

DDR18V Decouple

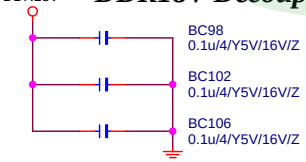

DDRVTT Decouple

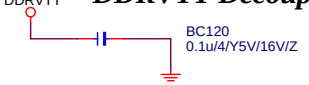

DDR TERMINATION CHANNEL B

DDR18V Decouple

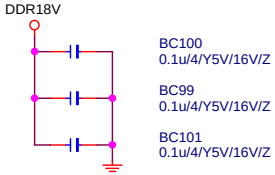

DDRVTT Decouple

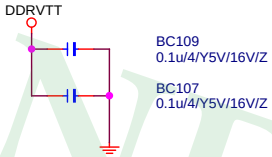

CONFIDENTIAL

Gigabyte Technology		
Title: DDRII TERMINATOR		
Size: Custom	Document Number: GA-G41MT-S2P-ME	Rev: 1.31
Date: Monday, February 14, 2011	Sheet 17 of 33	

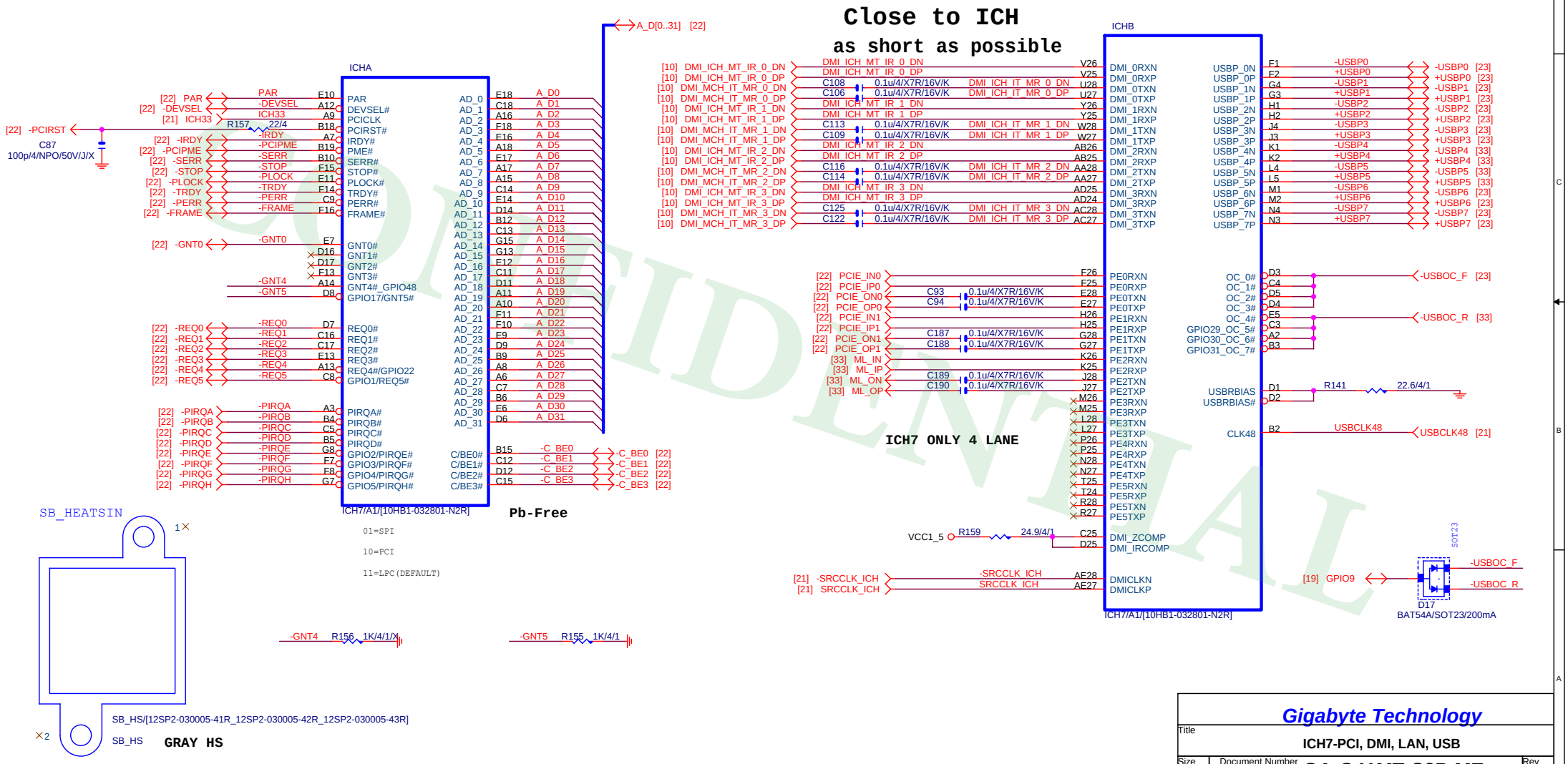

CONFIDENTIAL

Gigabyte Technology	
Title	ICH7-PCI, DMI, LAN, USB
Size B	Document Number GA-G41MT-S2P-ME
Rev	1.31
Date: Monday, February 14, 2011	Sheet 18 of 33

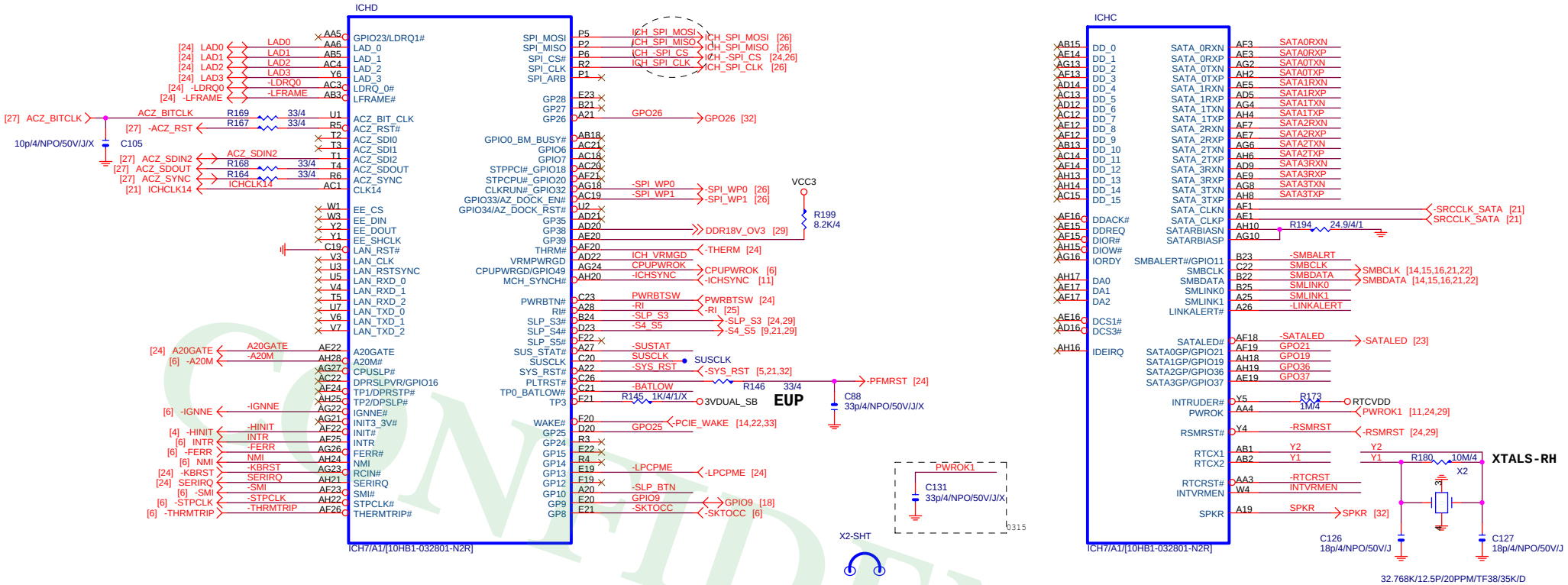

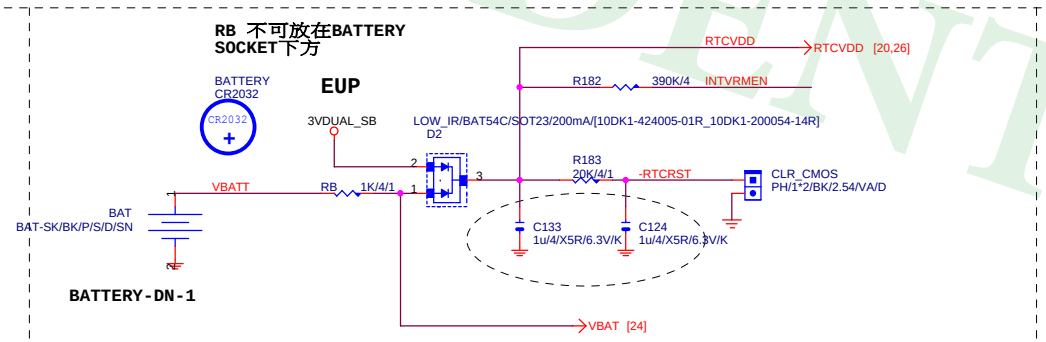

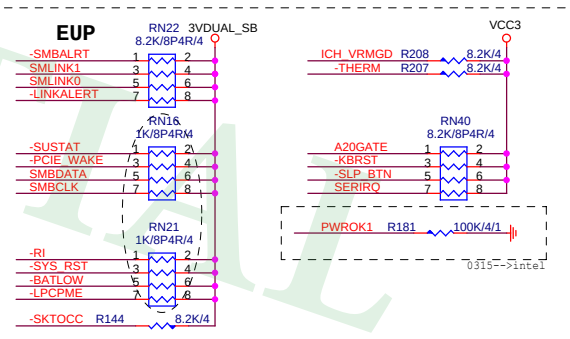

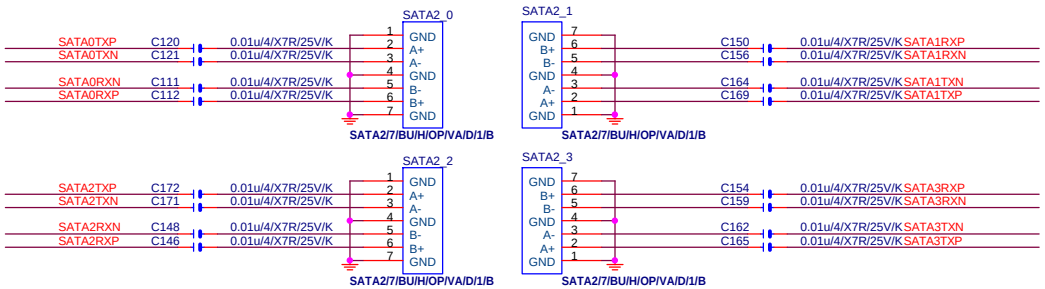

Gigabyte Technology	
Title	ICH7-IDE, SATA, GPIO, CTRL
Size Custom	Document Number GA-G41MT-S2P-ME
Rev	1.31
Date: Monday, February 14, 2011	Sheet 19 of 33

CONFIDENTIAL

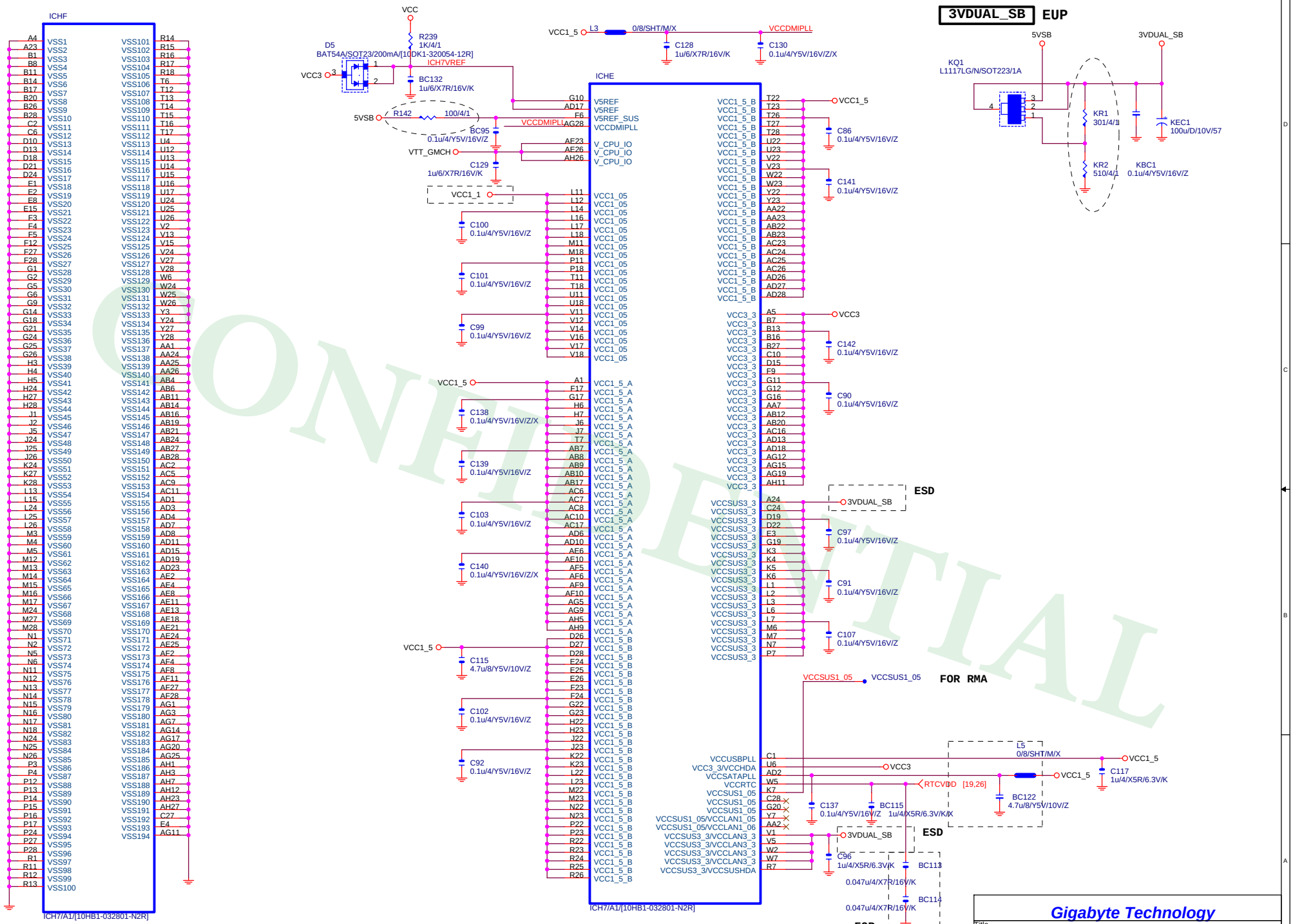

CONFIDENTIAL

CLK GEN CK505

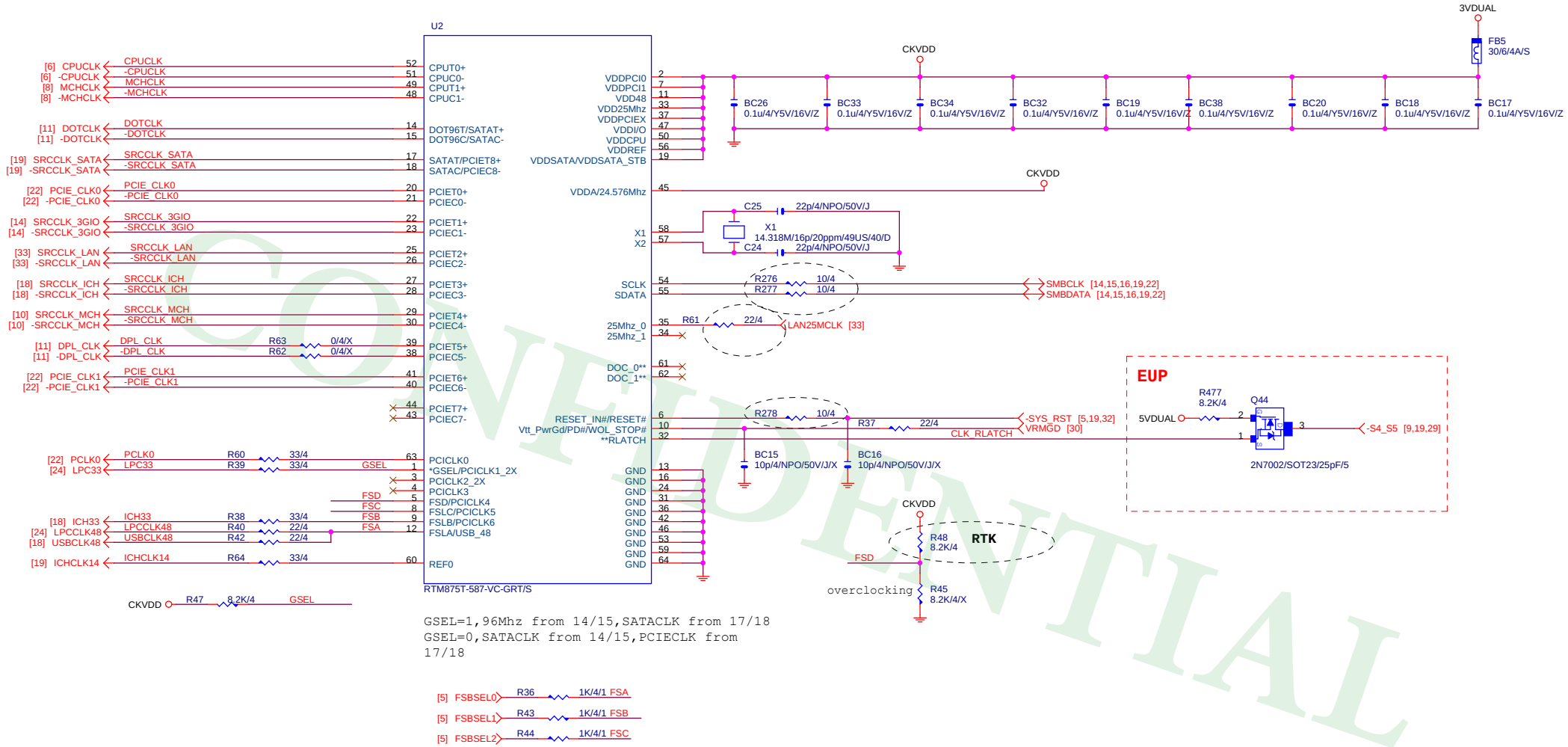

CONFIDENTIAL

Gigabyte Technology		
Title	CK505 CLK GEN	
Size Custom	Document Number GA-G41MT-S2P-ME	Rev 1.31
Date: Monday, February 14, 2011	Sheet 21 of 33	

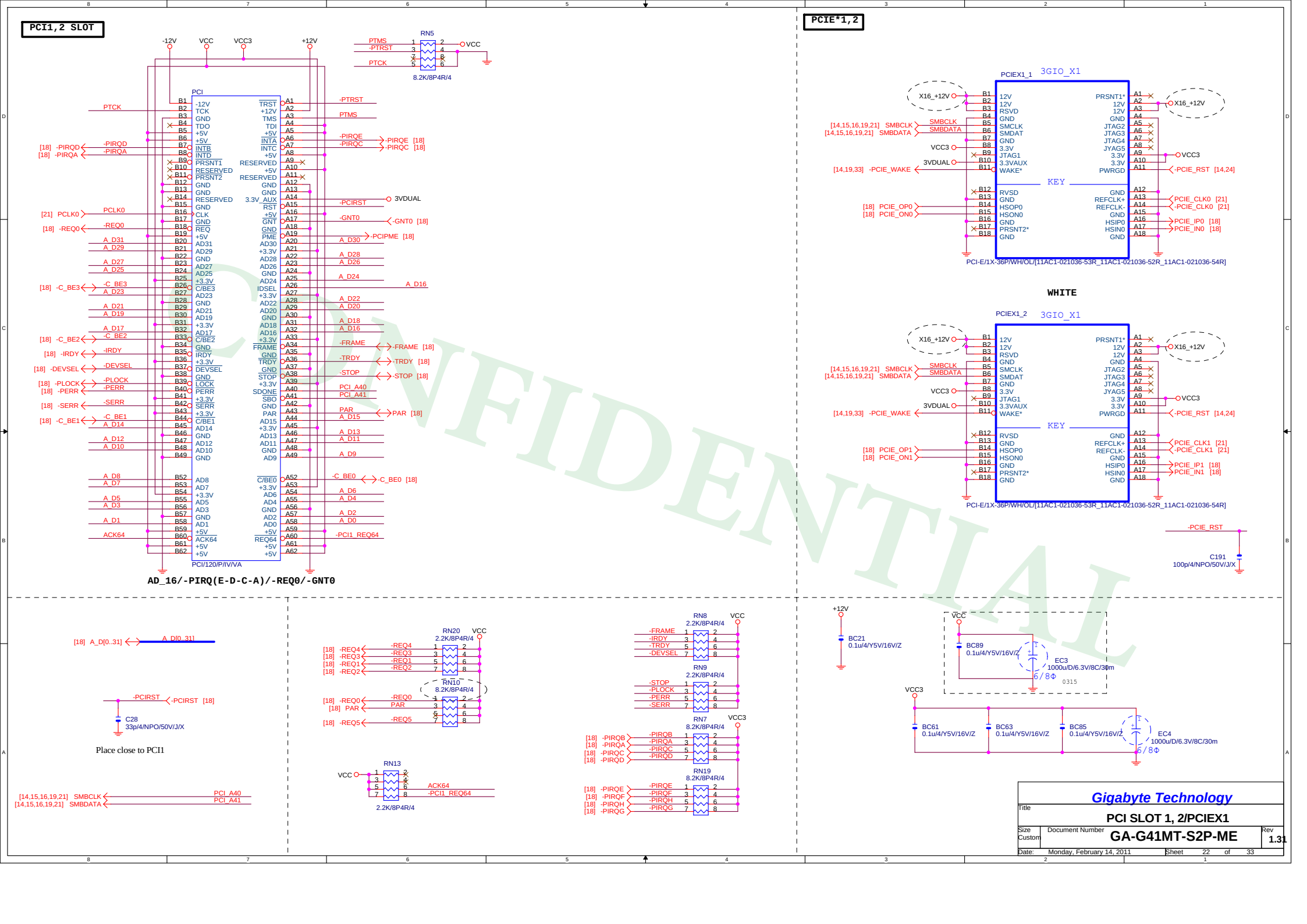

CONFIDENTIAL

IDE/SATA LED

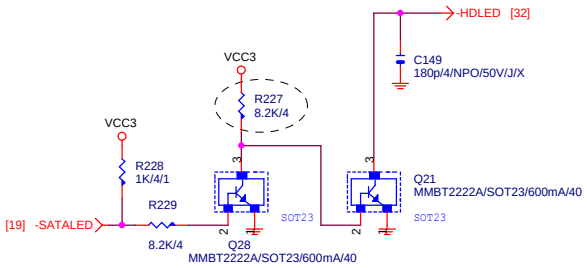

IDE RESET

N/A

FLOPPY

N/A

IDE

N/A

FRONT USB1

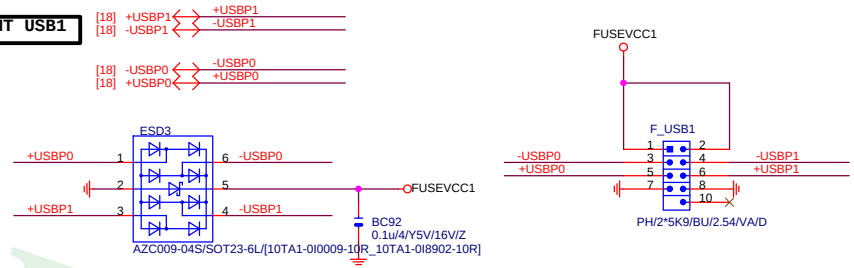

FRONT USB2

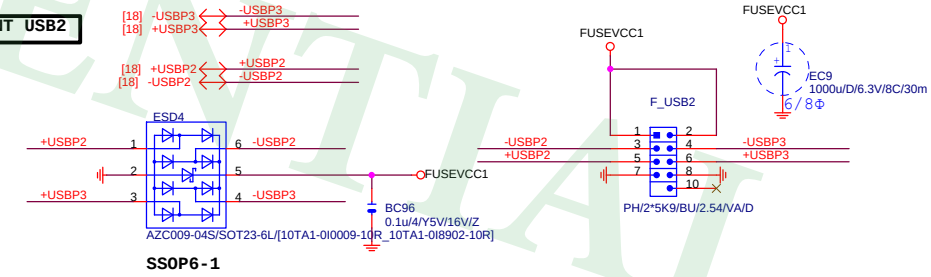

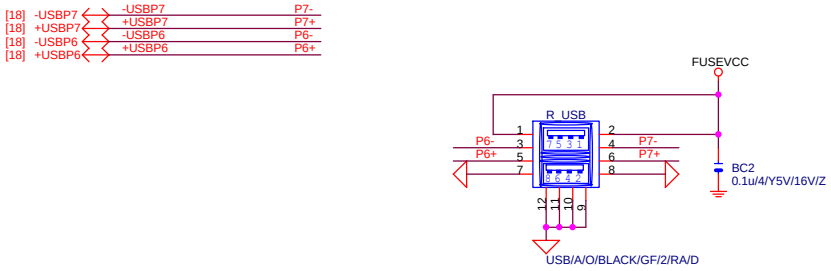

POP USBX2

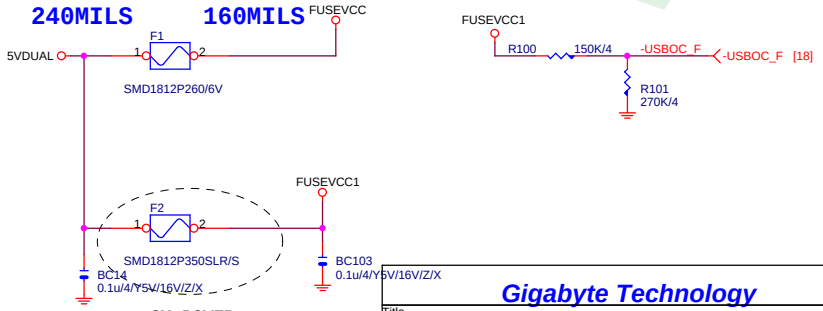

3X POWER

Gigabyte Technology			
Title	IDE,FDD,F_USB,R_USB		
Size B	Document Number	GA-G41MT-S2P-ME	Rev 1.31
Date: Monday, February 14, 2011	Sheet 23 of 33		

CONFIDENTIAL

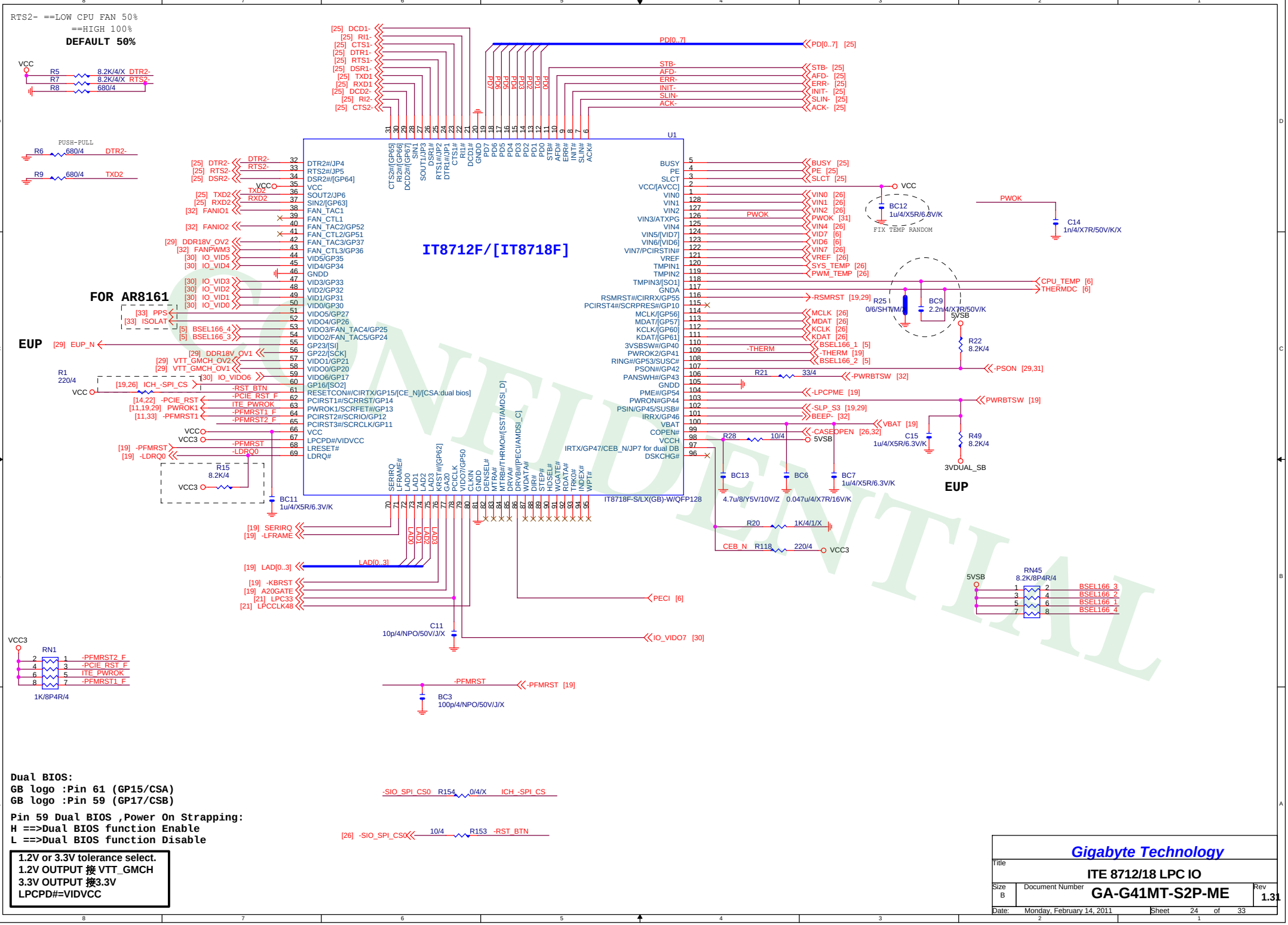
RTS2- ==LOW CPU FAN 50%
==HIGH 100%
DEFAULT 50%
IT8712F/[IT8718F]
U1
FOR AR8161
EUP
IT8718F-S/LX(GB)-W/QFP128
Dual BIOS:
GB logo :Pin 61 (GP15/CSA)
GB logo :Pin 59 (GP17/CSB)
Pin 59 Dual BIOS ,Power On Strapping:
H ==>Dual BIOS function Enable
L ==>Dual BIOS function Disable
1.2V or 3.3V tolerance select.
1.2V OUTPUT 接 VTT_GMCH
3.3V OUTPUT 接3.3V
LPCPD#=VIDVCC
Gigabyte Technology
Title
ITE 8712/18 LPC IO
Size B
Document Number
GA-G41MT-S2P-ME
Rev 1.31
Date: Monday, February 14, 2011
Sheet 24 of 33

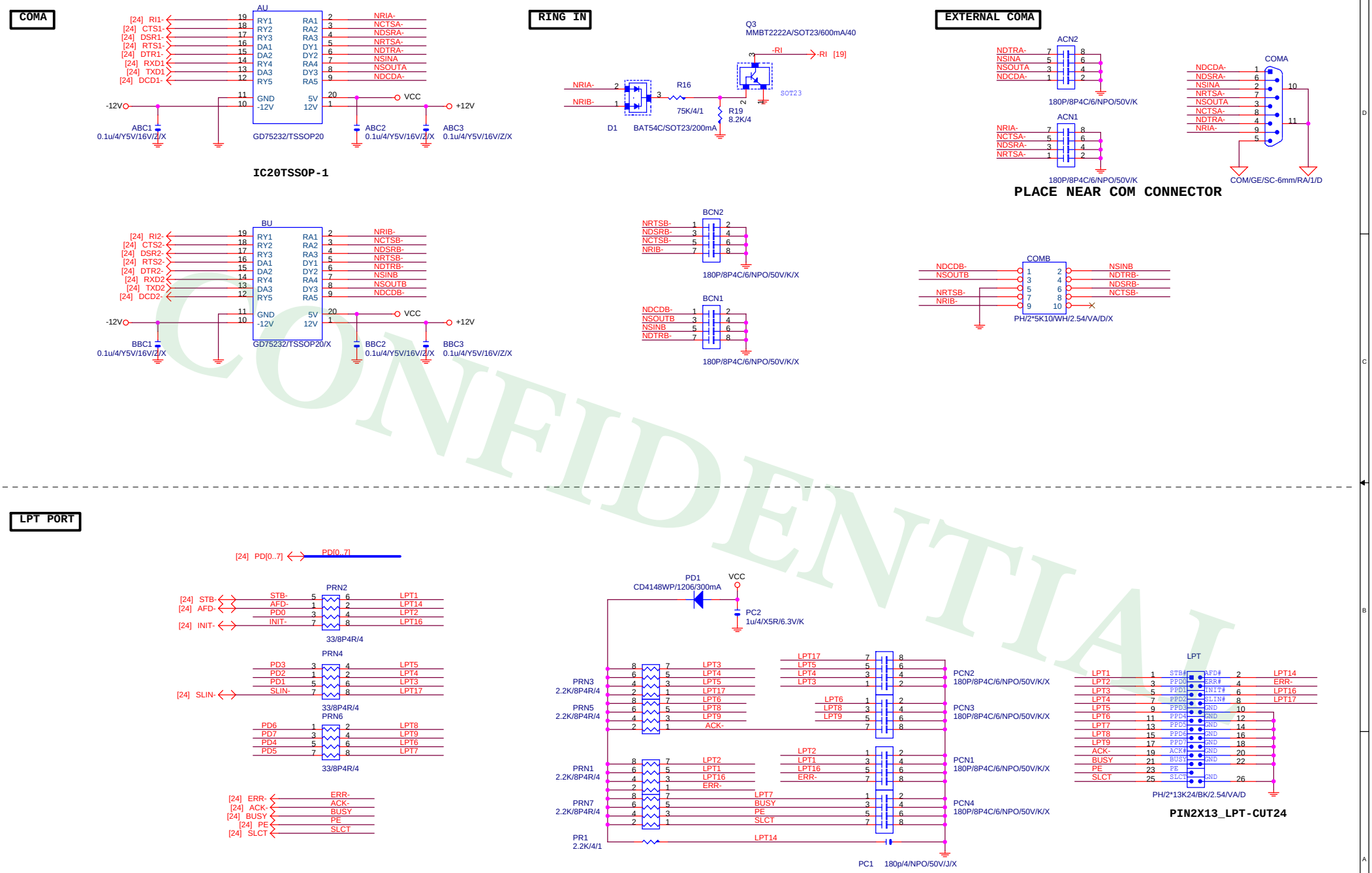

CONFIDENTIAL

TEMP H/W MONITOR

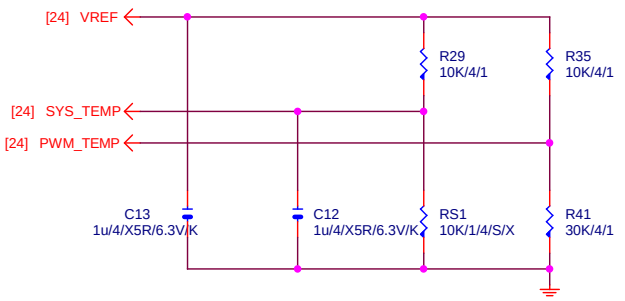

VOLTAGE-- H/W MONITOR

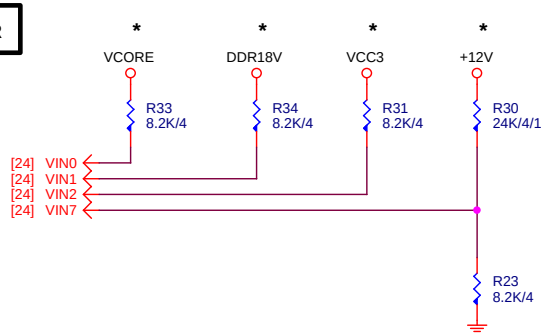

CASE OPEN

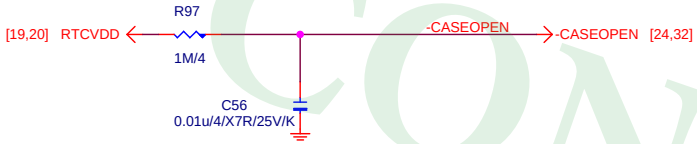

Case Open Circuits

DUAL BIOS

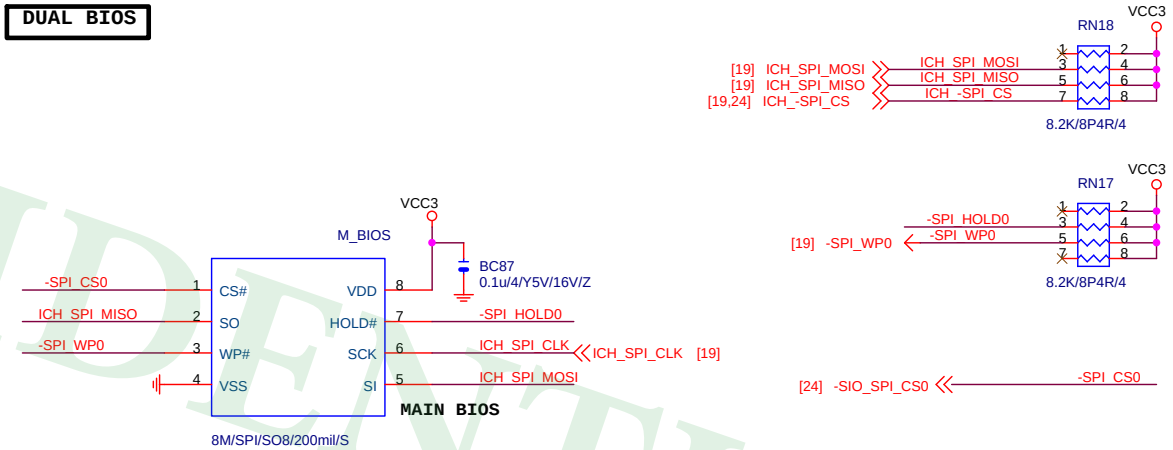

KB/MS

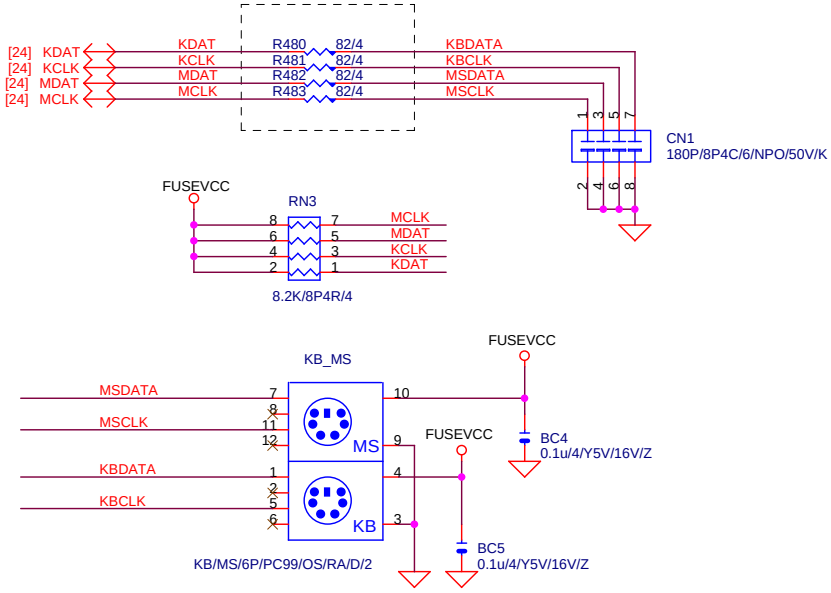

CONFIDENTIAL

Gigabyte Technology		
Title	HW-MONITOR/CI/KB/MS/BIOS	
Size Custom	Document Number GA-G41MT-S2P-ME	Rev 1.31
Date: Monday, February 14, 2011	Sheet 26 of 33	

AZALIA CODEC

ALC892/ALC889A/ALC889/ALC888B Colay

	ALC888B	ALC888 -VA	ALC889A	ALC888 -VD	ALC892
CR59	X	O	O	O	O
CR53,58	X	X	O	X	X
CR56	O	O	O	O	X
CR63	X	X	X	X	O
CR34	20K/1%	20K/1%	20K/0.1%	20K/1%	20K/1%

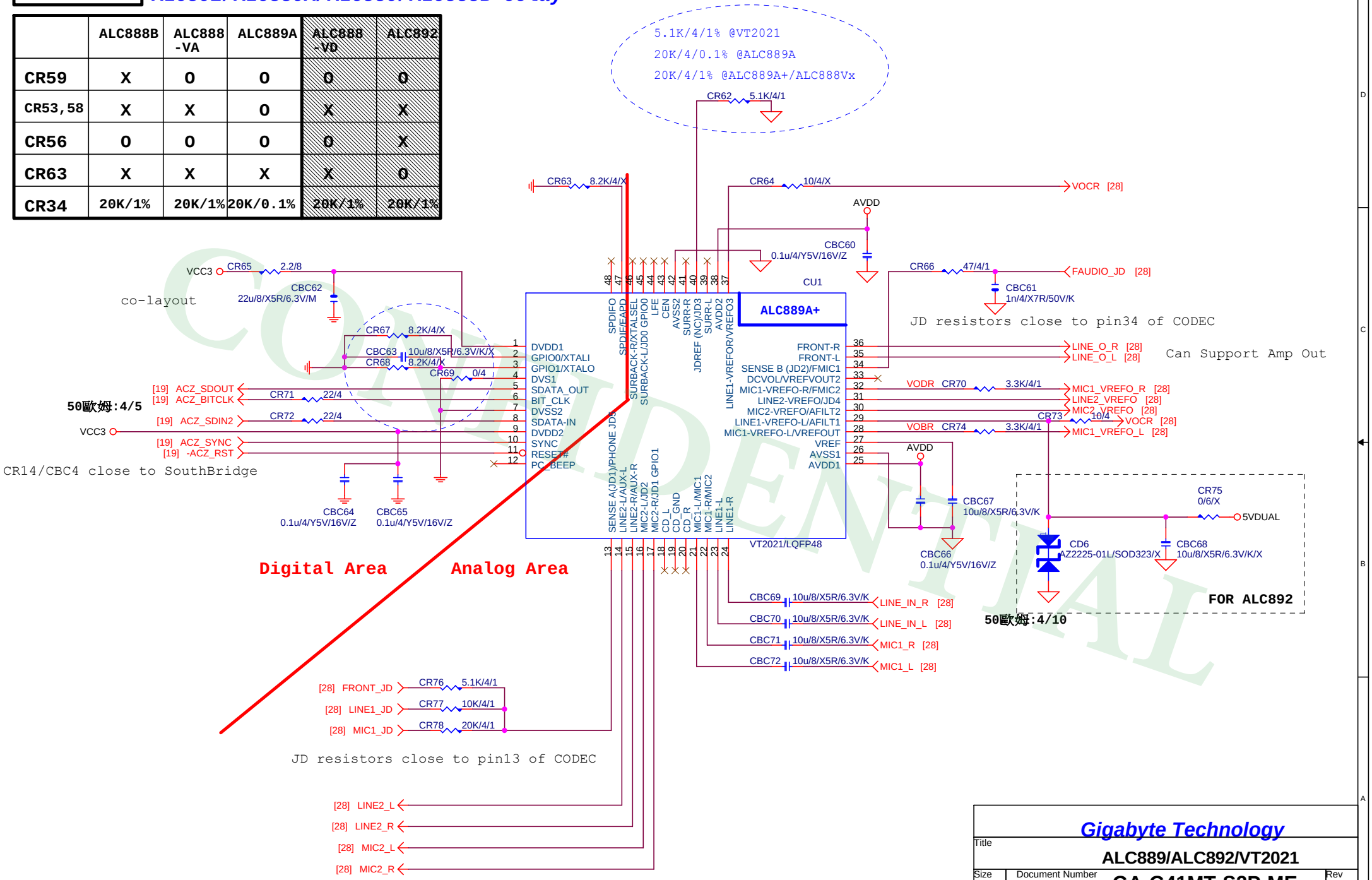

CONFIDENTIAL

Gigabyte Technology

Title: ALC889/ALC892/VT2021

Size: Custom | Document Number: GA-G41MT-S2P-ME | Rev: 1.31

Date: Monday, February 14, 2011 | Sheet 27 of 33

CODEC POWER/EMI PAD

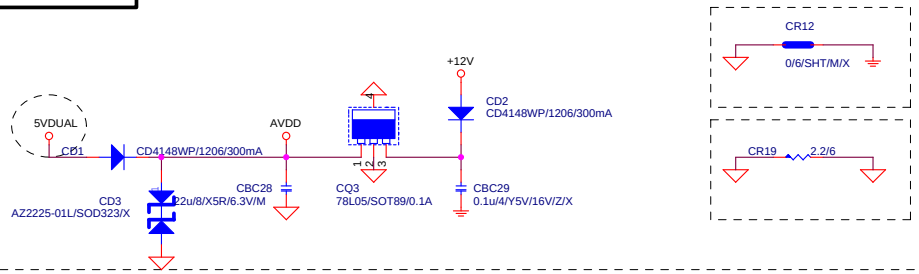

CD IN N/A

SPDIF IN N/A

AZALIA JACK

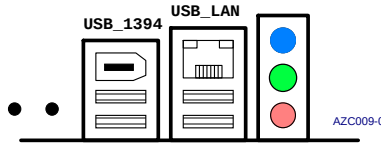

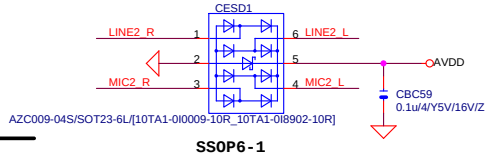

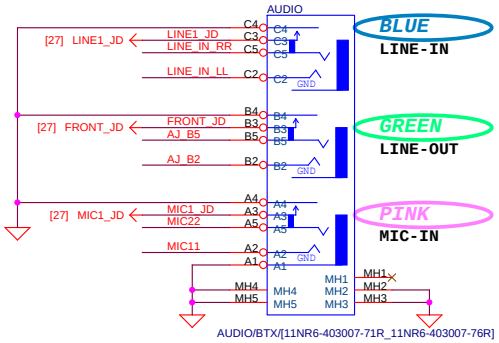

LINE-OUT

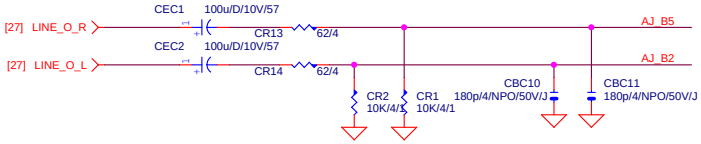

LINE-IN

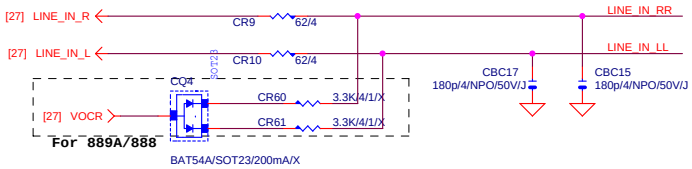

VIA 不SUPPORT

MIC-IN

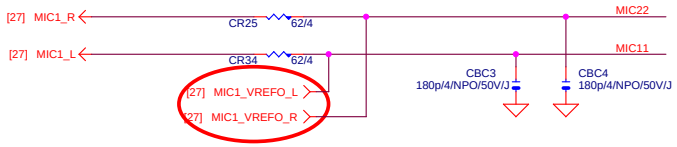

AZALIA FRONT PANEL

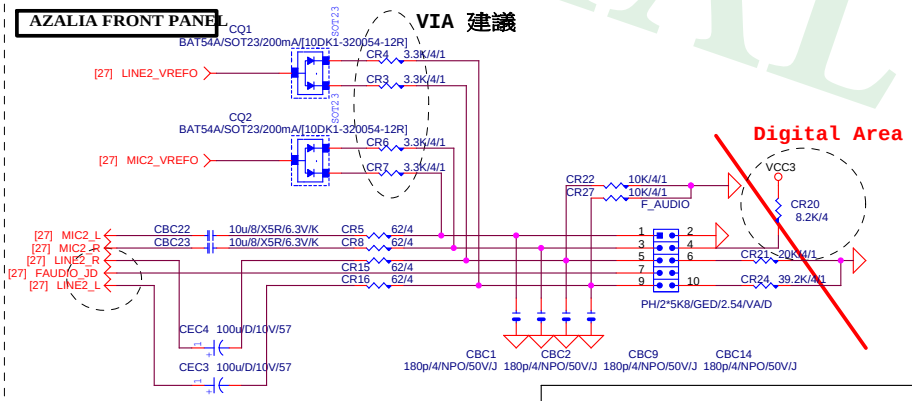

Gigabyte Technology		
Title	AUDIO JACK	
Size Custom	Document Number GA-G41MT-S2P-ME	Rev 1.31
Date: Monday, February 14, 2011	Sheet 28 of 33	

CONFIDENTIAL

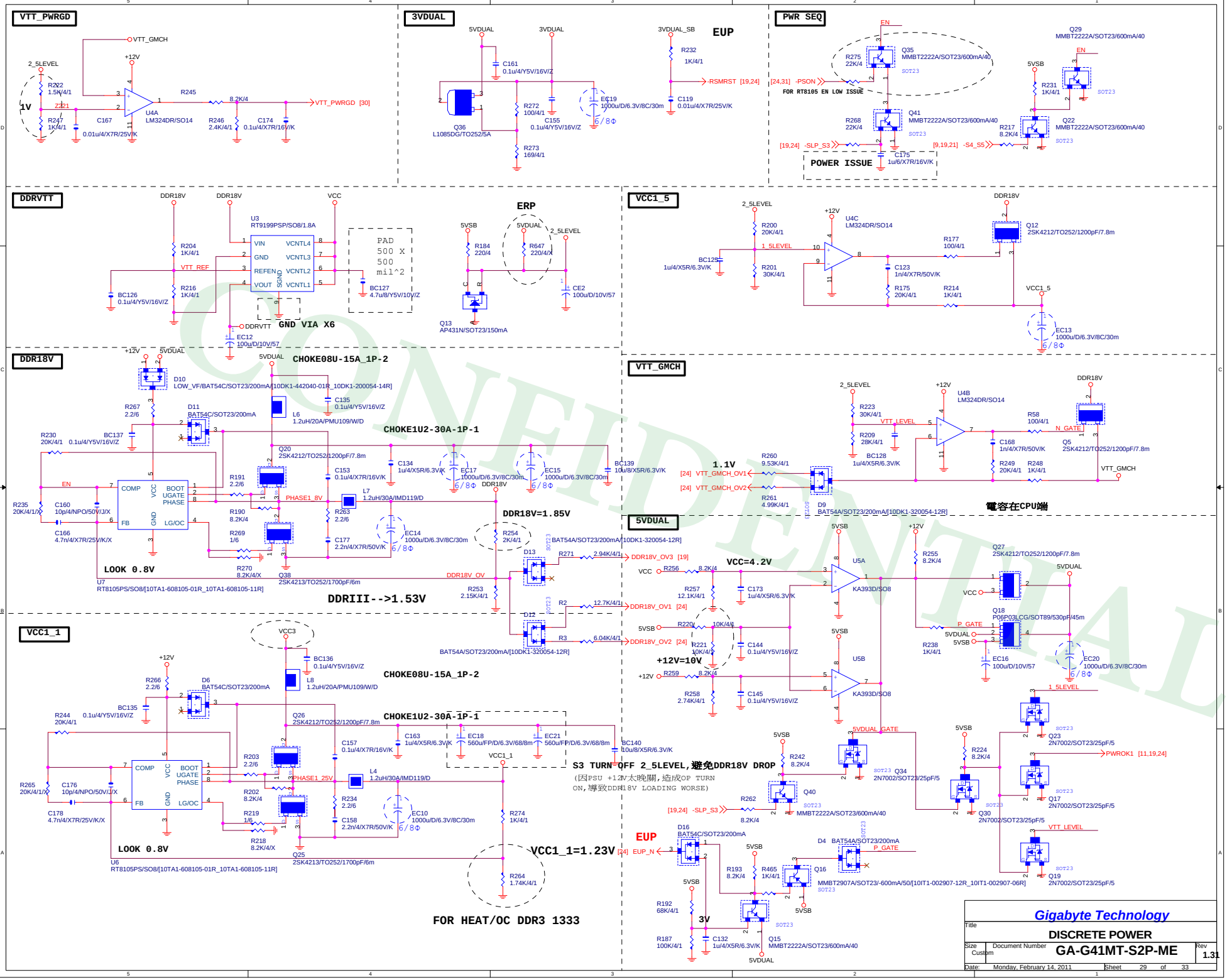
VTT_PWRGD
3VDUAL
EUP
PWR SEQ
DDRVTT
ERP
VCC1_5
DDR18V
CHOKE08U-15A_1P-2
CHOKE1U2-30A-1P-1
VTT_GMCH
5VDUAL
DDR18V=1.85V
LOOK 0.8V
DDRIII-->1.53V
VCC=4.2V
+12V=10V
VCC1_1
S3 TURN OFF 2_5LEVEL,避免DDR18V DROP
(因PSU +12V太晚關,造成OP TURN ON,導致DDR18V LOADING WORSE)
VCC1_1=1.23V
FOR HEAT/OC DDR3 1333
POWER ISSUE
GND VIA X6
電容在CPU端
CONFIDENTIAL
Gigabyte Technology
Title
DISCRETE POWER
Size Custom
Document Number
GA-G41MT-S2P-ME
Rev 1.31
Date: Monday, February 14, 2011
Sheet 29 of 33

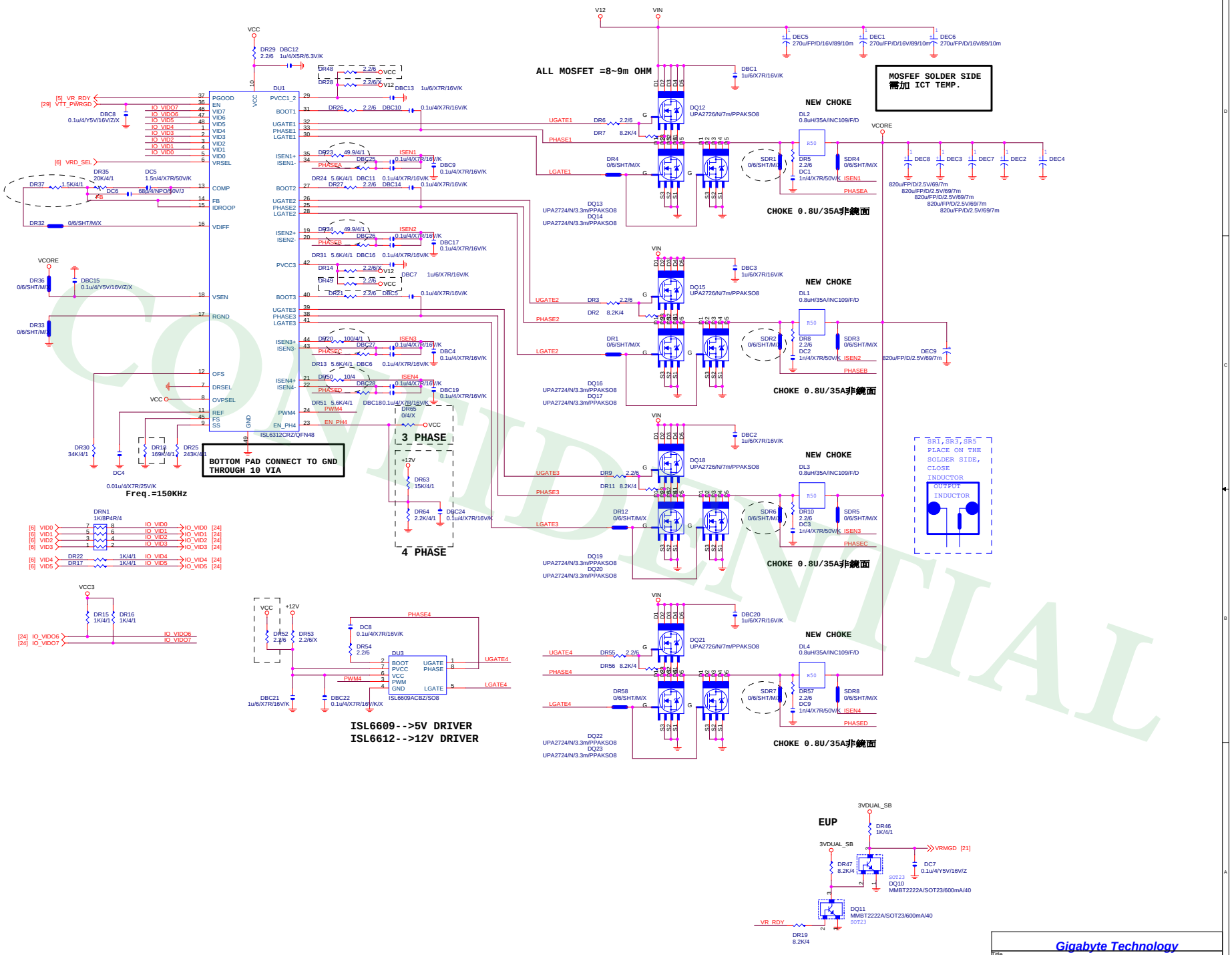

CONFIDENTIAL

Title	Gigabyte Technology		
	VRD 11.1 ISL6334		
Size Custom	Document Number GA-G41MT-S2P-ME		Rev 1.31
Date: Monday, February 14, 2011	Sheet 30 of 33		

ATX POWER CONNECTOR

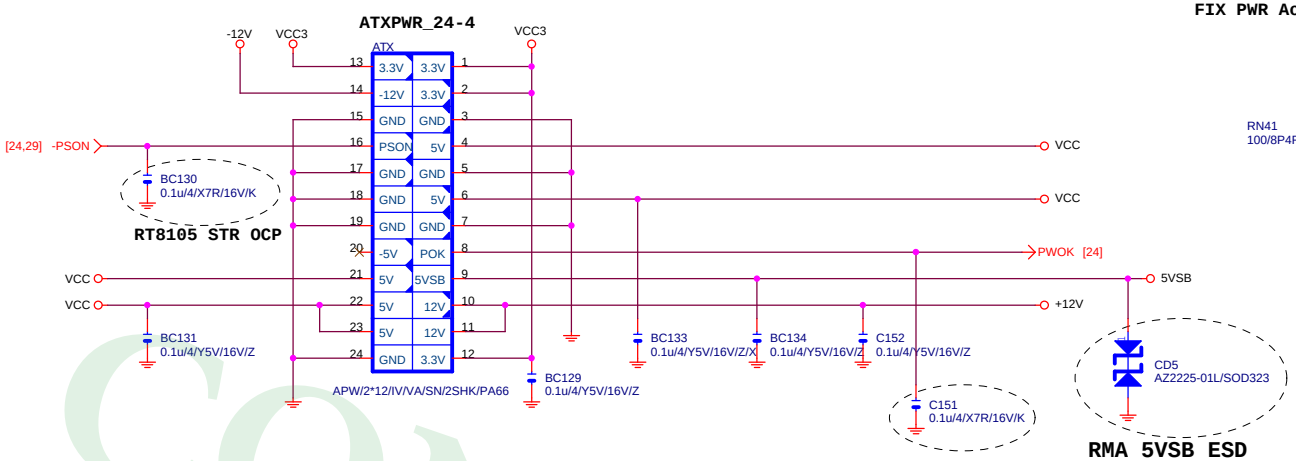

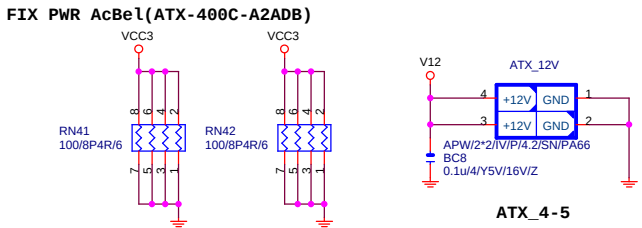

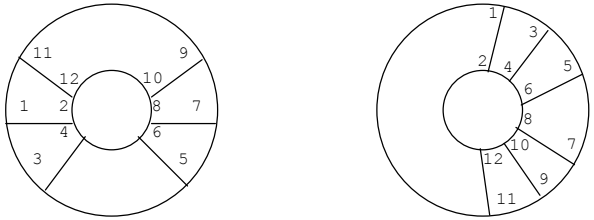

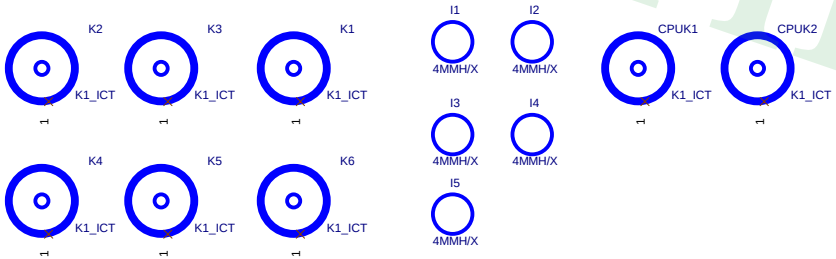

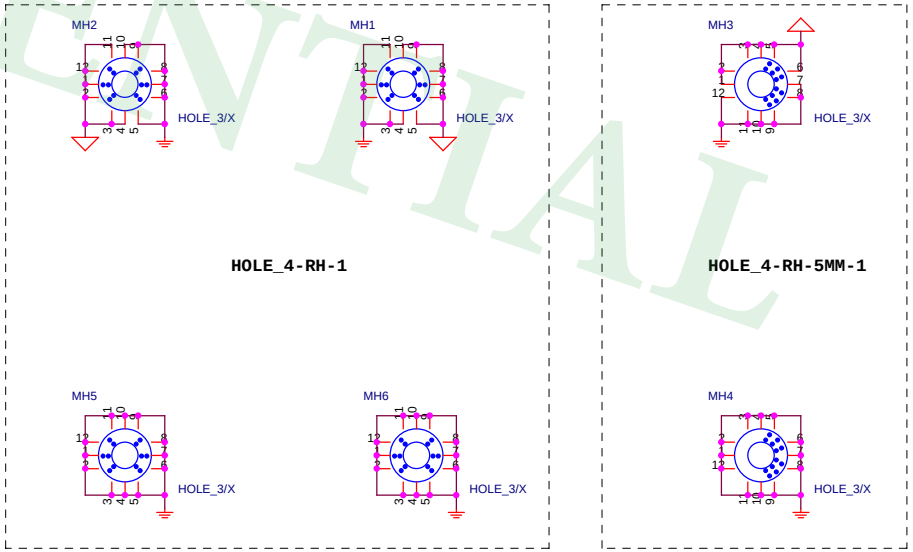

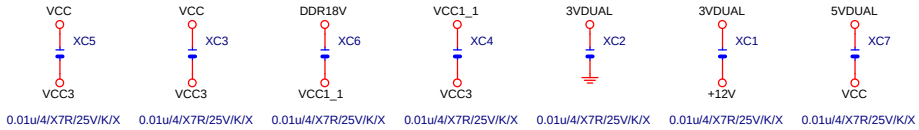

CONFIDENTIAL

Gigabyte Technology			
Title: ATX POWER CONNECTOR			
Size: B	Document Number: GA-G41MT-S2P-ME		Rev: 1.31
Date: Monday, February 14, 2011		Sheet 31 of 33	

CPU SMART FAN

SMART FAN

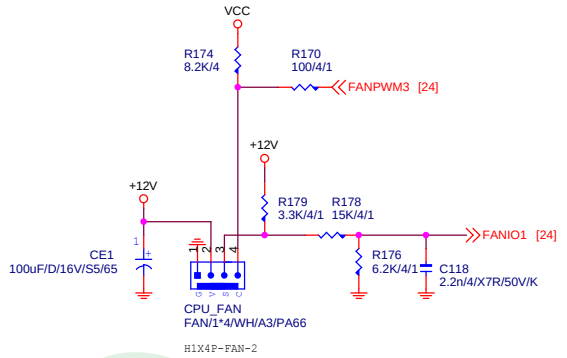

PROCESSOR HOT

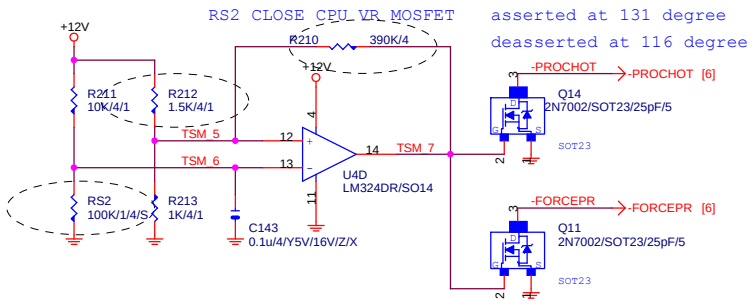

INTEL FRONT PANEL

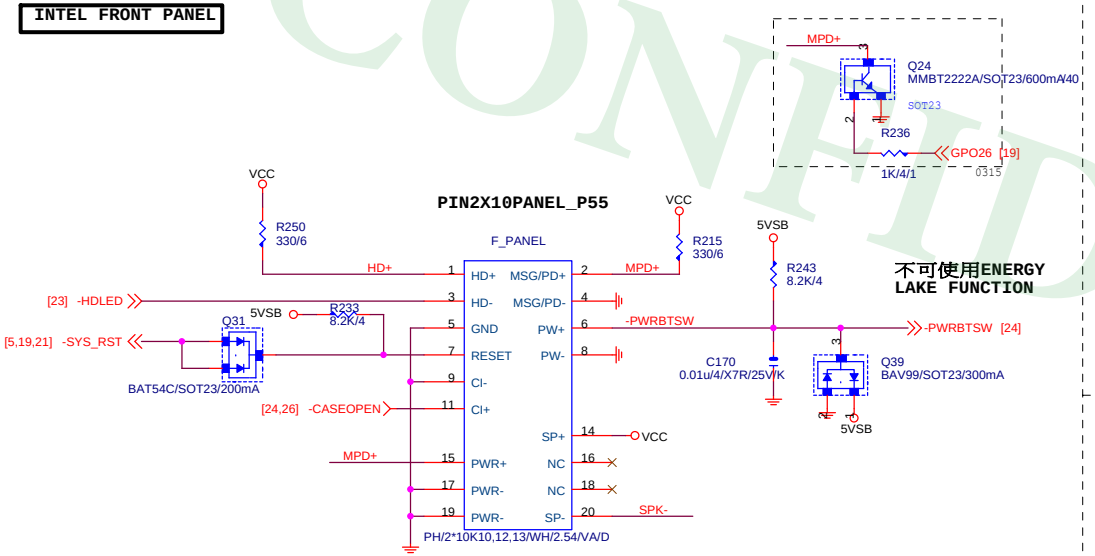

SYS_FAN

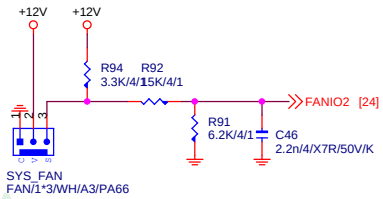

BUZZER

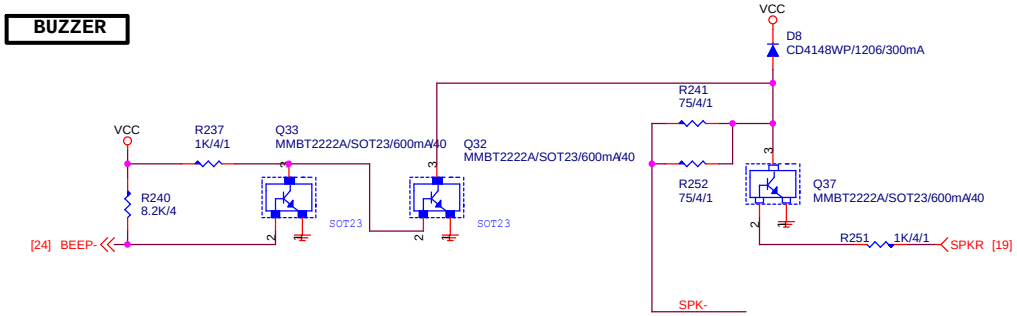

CONFIDENTIAL

Gigabyte Technology		
Title	FRONT PANEL	
Size Custom	Document Number GA-G41MT-S2P-ME	Rev 1.31
Date: Monday, February 14, 2011	Sheet 32 of 33	

PCIE-1G LAN

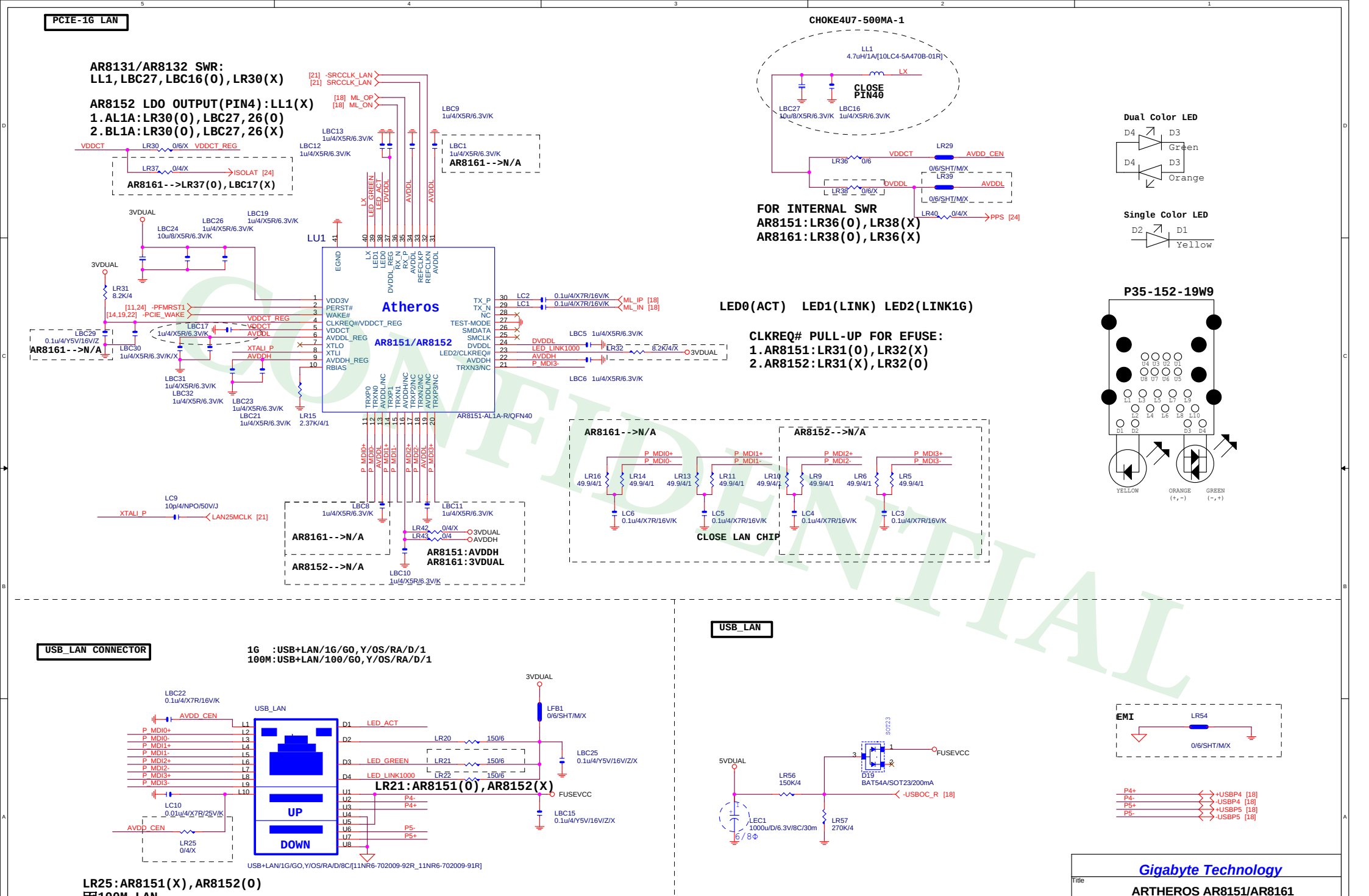

CONFIDENTIAL