Model Name:GA-G41MT-S2PT

Revision 2.12

SHEET	TITLE
01	COVER SHEET
02	BLOCK DIAGRAM
03	BOM & PCB MODIFY HISTORY
04	P4_LGA775_A
05	P4_LGA775_B,D
06	P4_LGA775_C
07	P4_LGA775_E,F,G,H
08	G41_HOST
09	G41_DDRII
10	G41_PCI E, DMI
11	G41_VGA
12	G41_GND
13	G41_PWR
14	PCI EXPRESS*16 SLOT
15	DDR3 CHANNEL A
16	DDR3 CHANNEL B
17	DDR3 TERMINATION
18	ICH7 PCI, USB, DMI, LAN
19	ICH7 IDE, GPIO, SATA, CTRL
20	ICH7 VCC, GND
21	CK505 CLOCK.
22	PCI SLOT 1,2,PCIE*1
23	IDE
24	ITE 8720 GB
25	COM_LPT
26	CI,HWM,KB/MS,DUALBIOS
27	CODEC ALC887-VD2

SHEET	TITLE
28	REAR AUDIO JACK
29	DISCRETE POWER
30	VCORE PWM_ISL6312
31	ATX, OTHERS POWER
32	FRONT PANEL
33	ARTHEROS AR8151

CONFIDENTIAL

BLOCK DIAGRAM

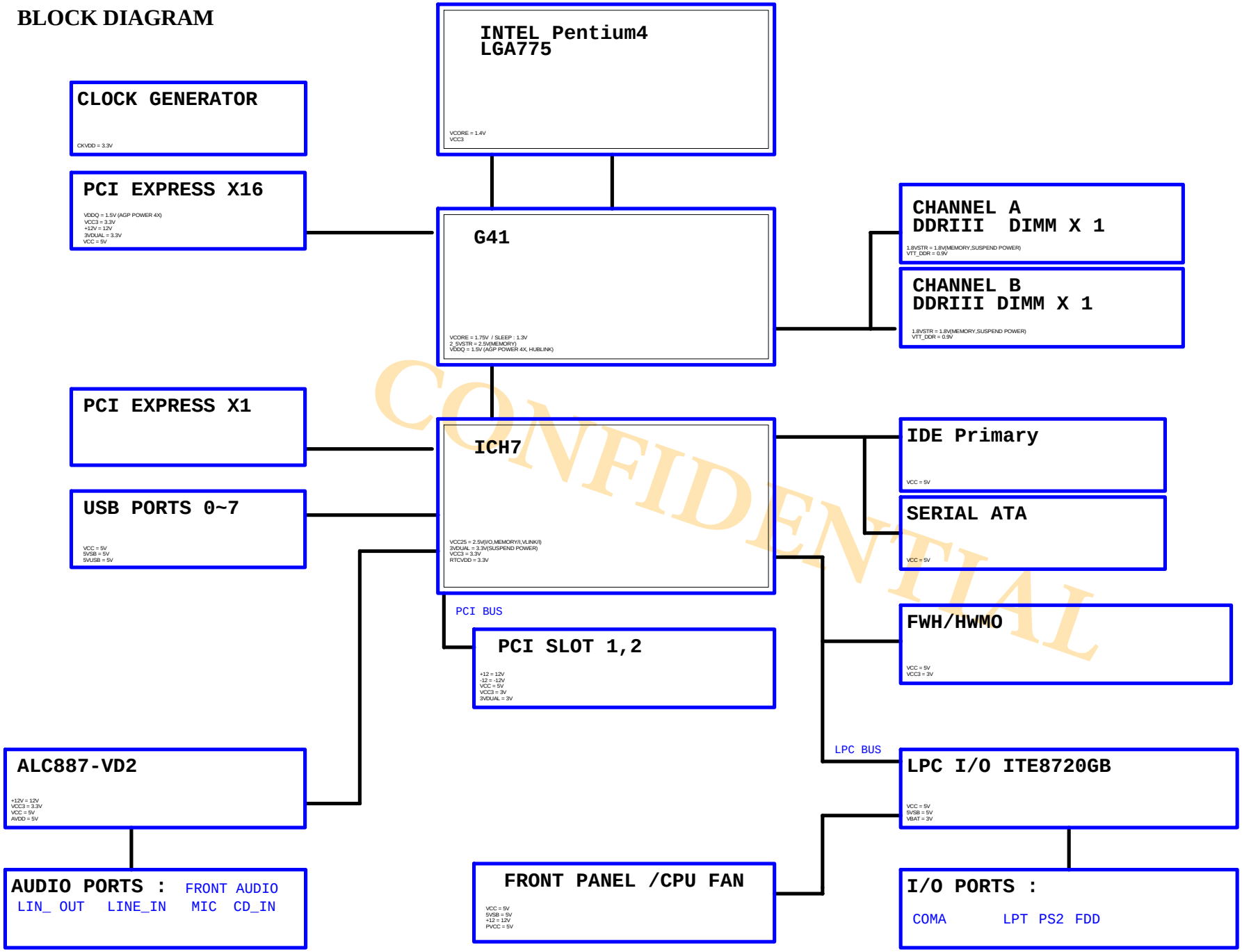

CONFIDENTIAL

Gigabyte Technology		
Title: BOM & PCB MODIFY HISTORY		
Size: Custom	Document Number: GA-G41MT-S2PT	Rev: 2.12
Date: Thursday, July 12, 2012	Sheet 2 of 33	

Model Name:GA-G41MT-S2PT

Version: 2.12

Component value change history

2012/05/29

Data	Change Item	Reason

Circuit or PCB layout change for next version

DATE	Change Item	Reason

CONFIDENTIAL

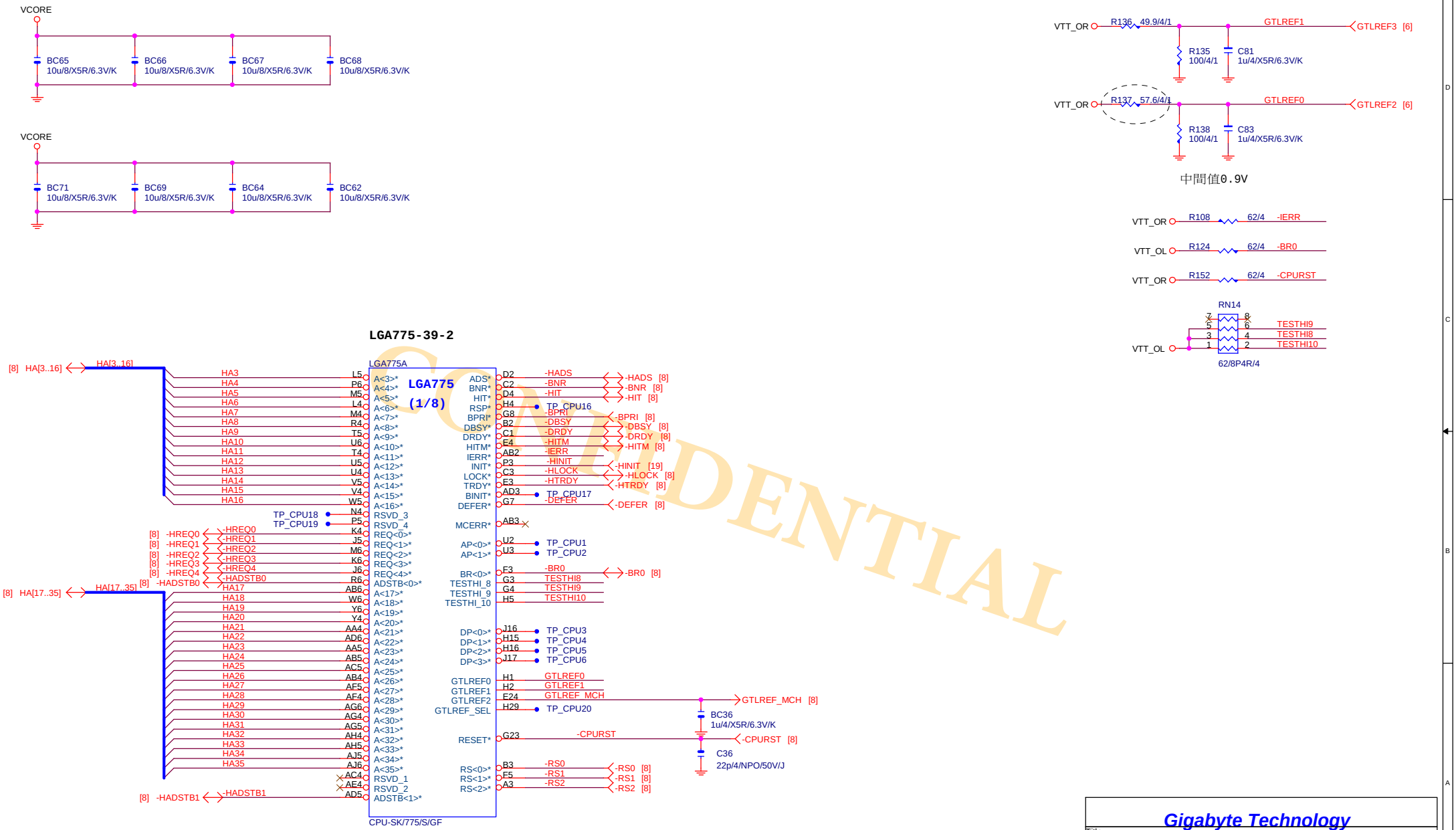

CONFIDENTIAL

Gigabyte Technology			
Title	P4_LGA775-A		
Size B	Document Number GA-G41MT-S2PT		Rev 2.12
Date: Thursday, July 12, 2012	Sheet 4 of 33		

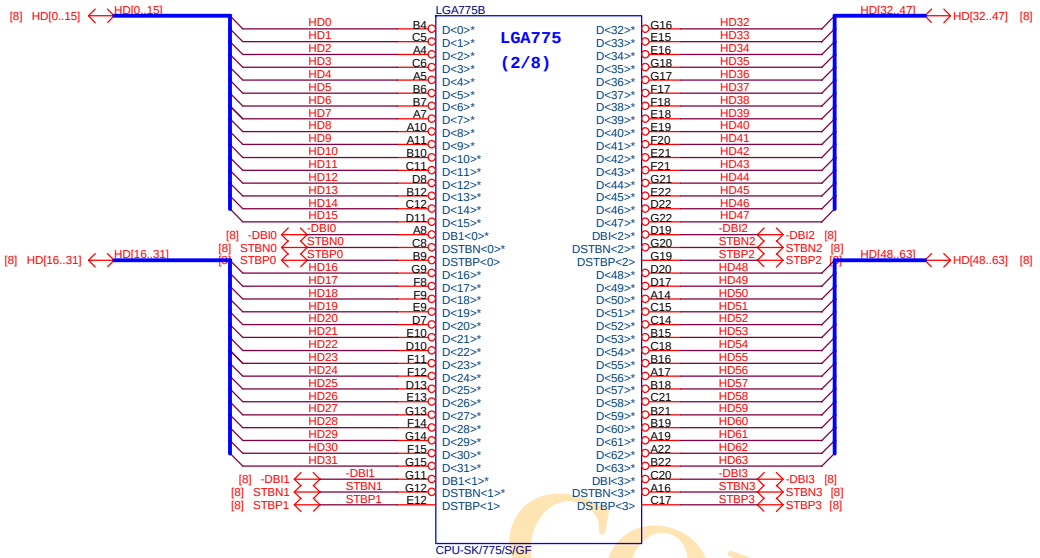

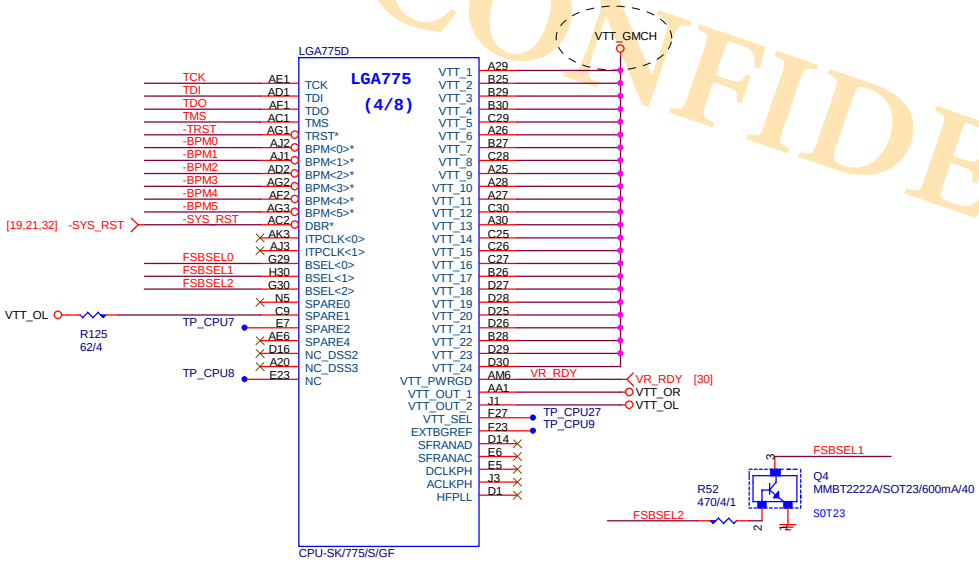

FIX FSB1600 LATCH FAIL

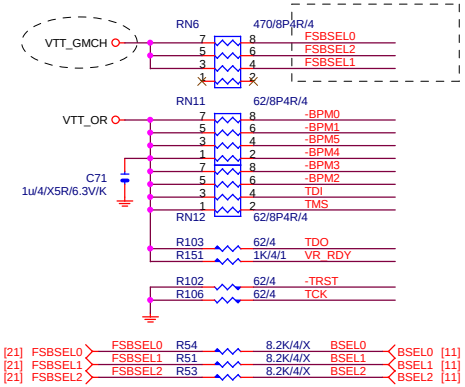

TO CLK GEN

TO NB

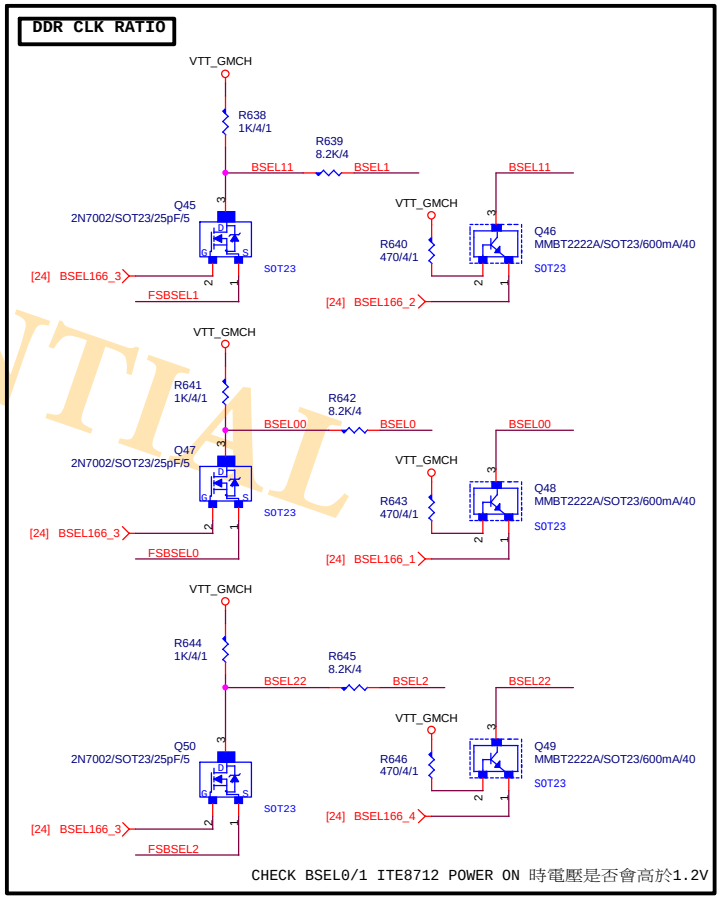

CHECK BSEL0/1 ITE8712 POWER ON 時電壓是否會高於1.2V

	FSA	FSB	FSC			
	FSBSEL0	FSBSEL1	FSBSEL2	Clock		
?	1	0	1	100MHz		
?	1	0	0	133MHz	3/4	400/533
G33	0	1	0	200MHz	2/2.66/3.33/4+	400/533/667/800
G33	0	0	0	266MHz	2/2.5/3/4~	533/667/800/1066
G33	0	0	1	333MHz	2/2.4/3.2/4#	667/800/1066/1333

CONFIDENTIAL

Gigabyte Technology

Title: P4_LGA775-B,D

Size: Custom | Document Number: GA-G41MT-S2PT | Rev: 2.12

Date: Thursday, July 12, 2012 | Sheet 5 of 33

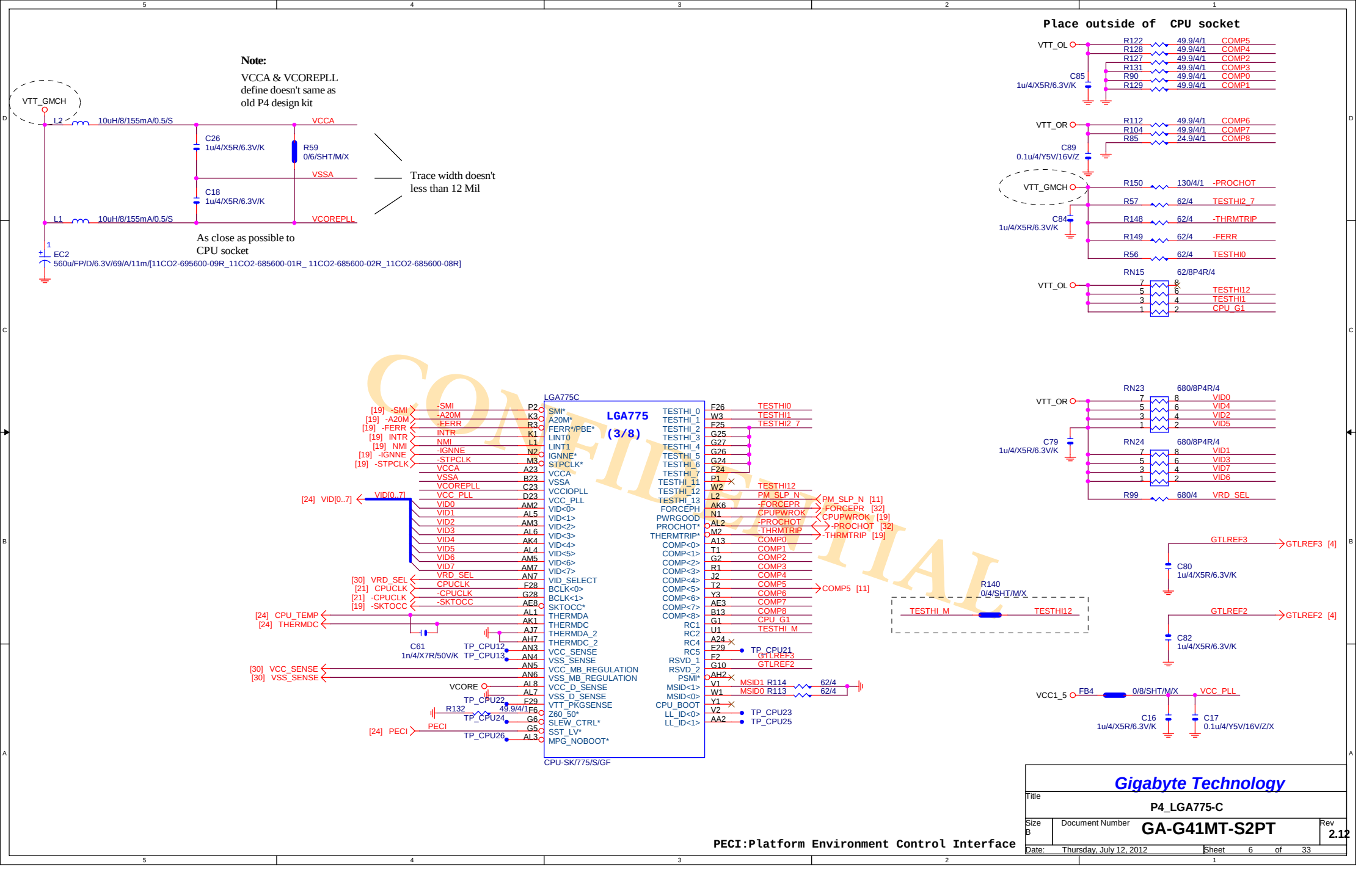

CONFIDENTIAL

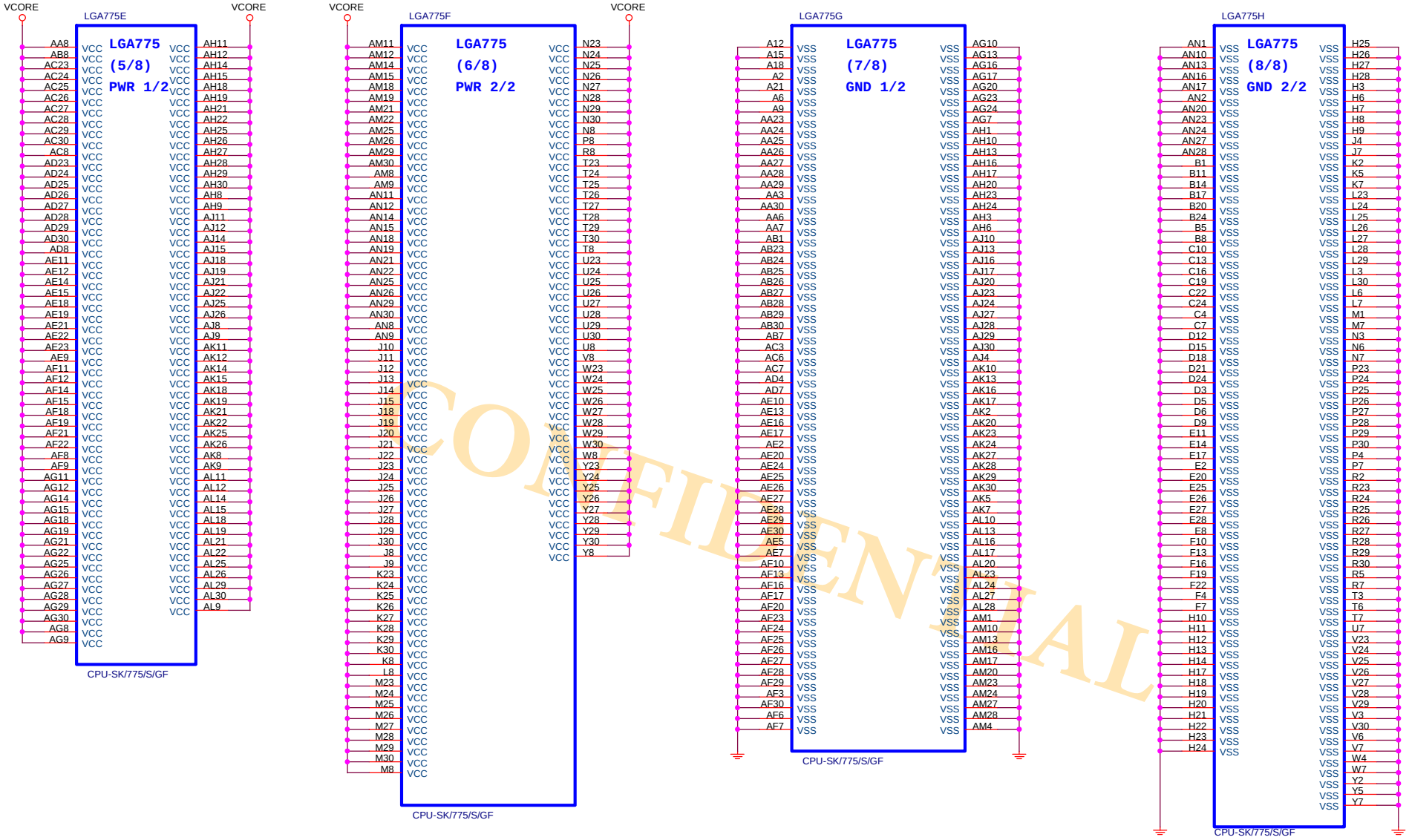

CONFIDENTIAL

Gigabyte Technology

Title	P4_LGA775-E,F,G,H	
Size B	Document Number GA-G41MT-S2PT	Rev 2.12
Date: Thursday, July 12, 2012	Sheet 7 of 33	

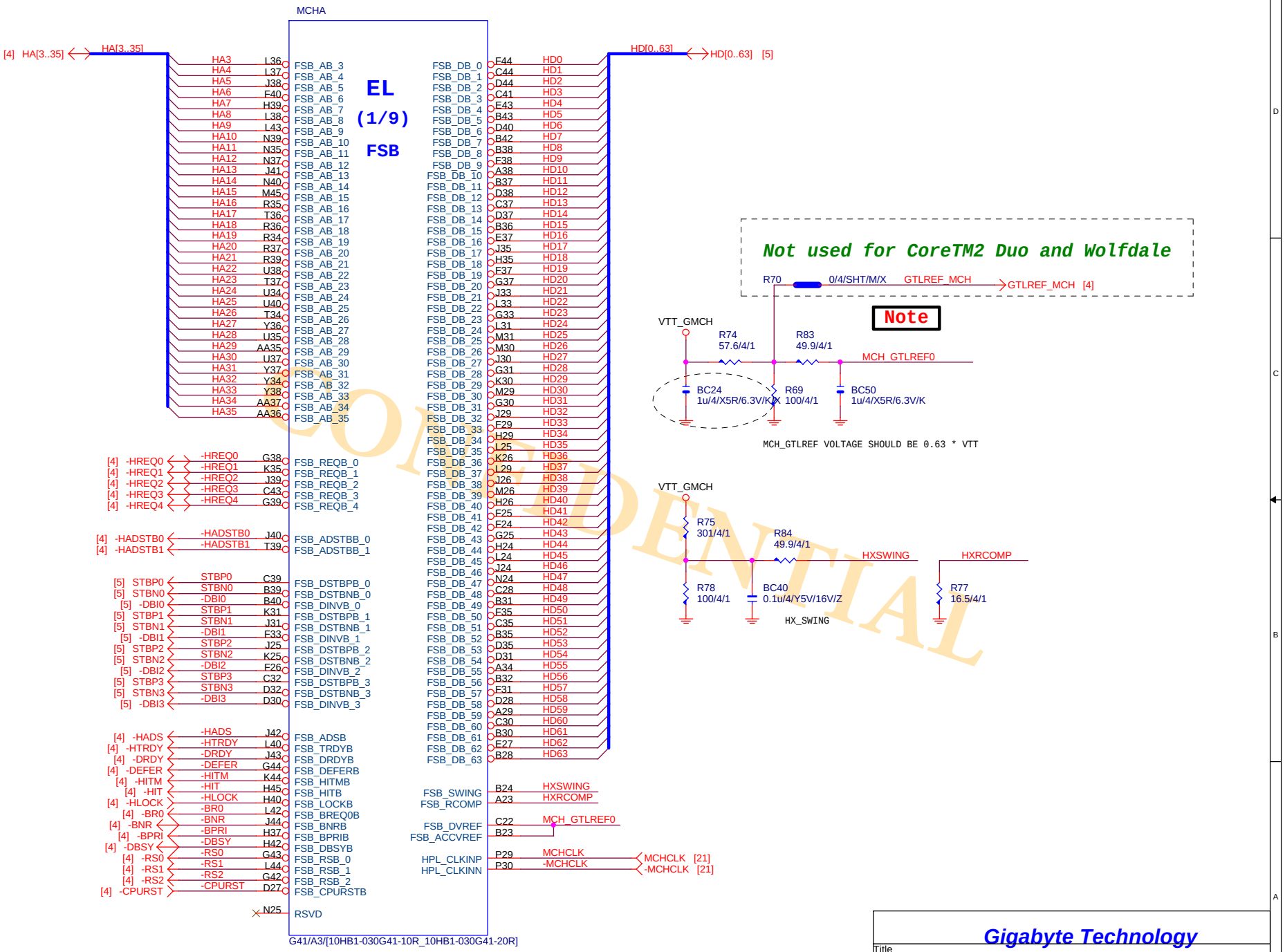

CONFIDENTIAL

Gigabyte Technology			
Title	GMCH-HOST		
Size Custom	Document Number GA-G41MT-S2PT		Rev 2.12
Date: Thursday, July 12, 2012	Sheet 8 of 33		

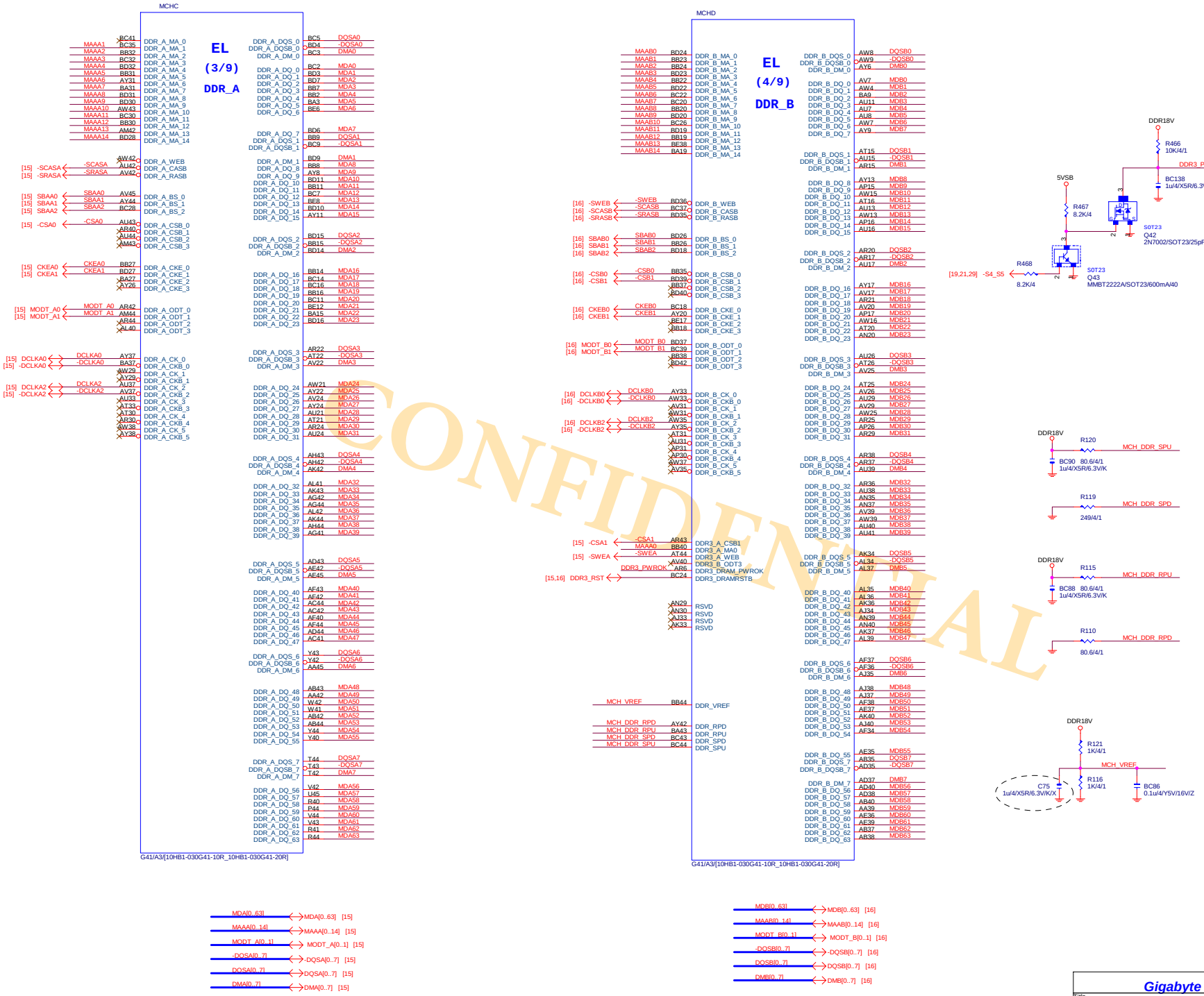

CONFIDENTIAL

Gigabyte Technology	
Title	GMCH-MEMORY
Size C	Document Number GA-G41MT-S2PT
Rev	2.12
Date: Thursday, July 12, 2012	Sheet 9 of 33

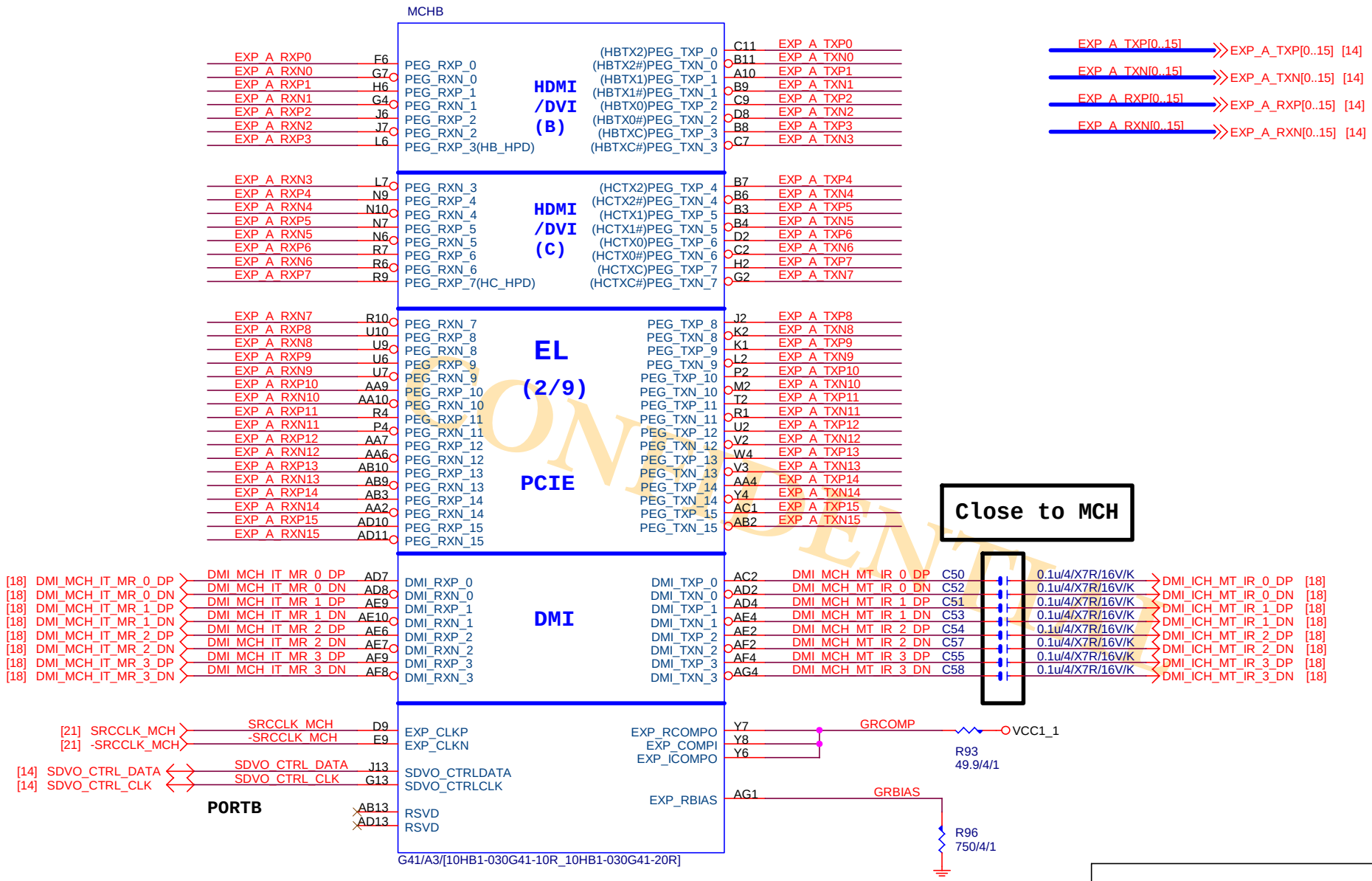

Gigabyte Technology	
Title	GMCH-PCI E & DMI
Size Custom	Document Number GA-G41MT-S2PT
Rev	2.12
Date: Thursday, July 12, 2012	Sheet 10 of 33

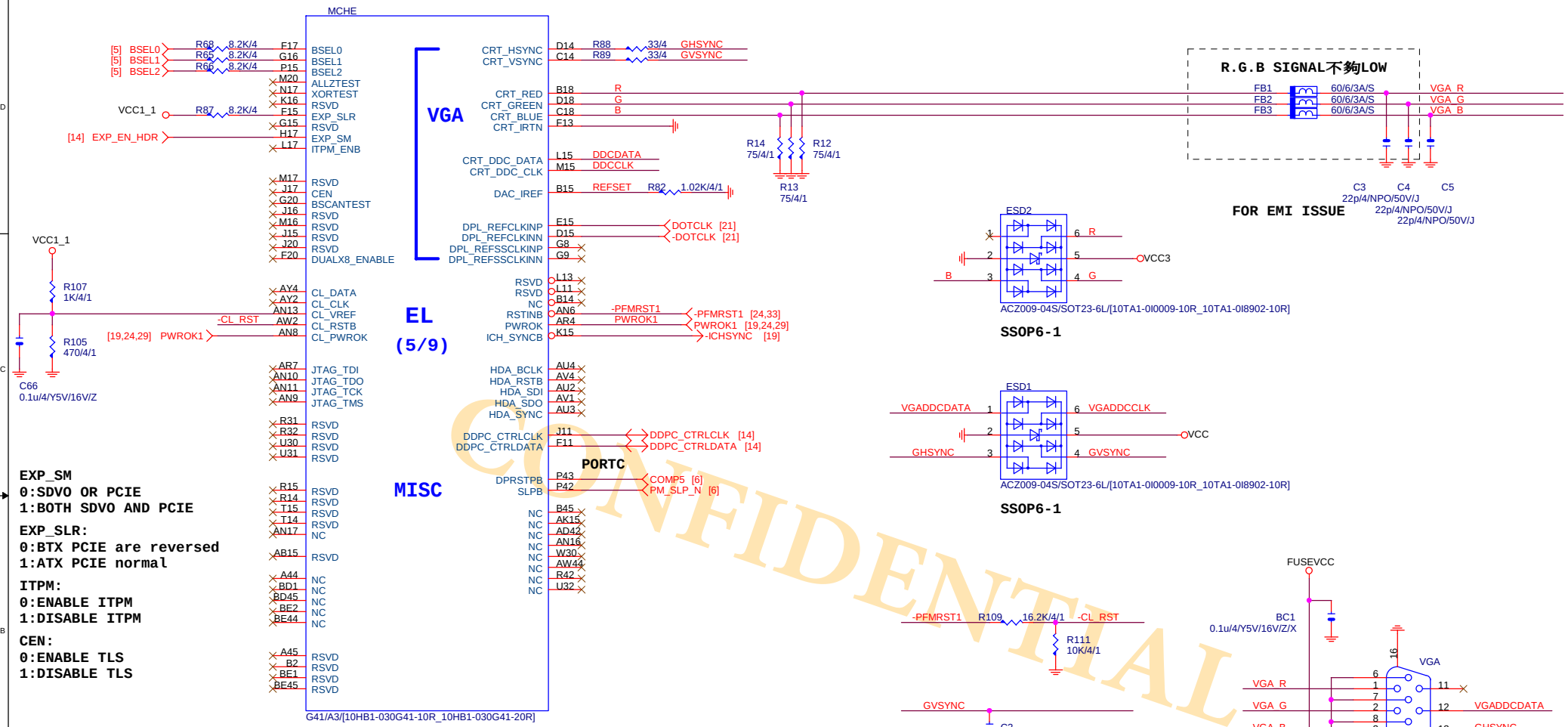

Title	GMCH-INTERNAL VGA
Size B	Document Number GA-G41MT-S2PT
Rev	2.12
Date: Thursday, July 12, 2012	Sheet 11 of 33

Gigabyte Technology

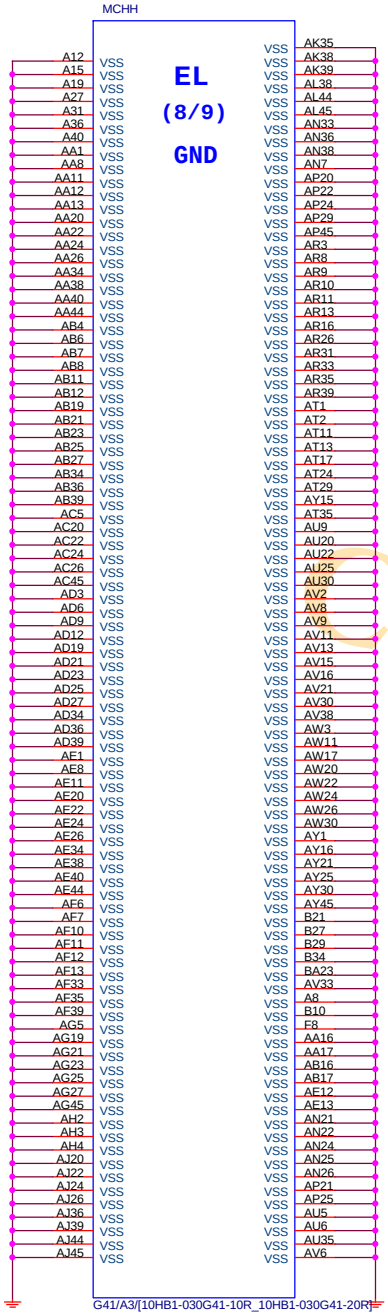

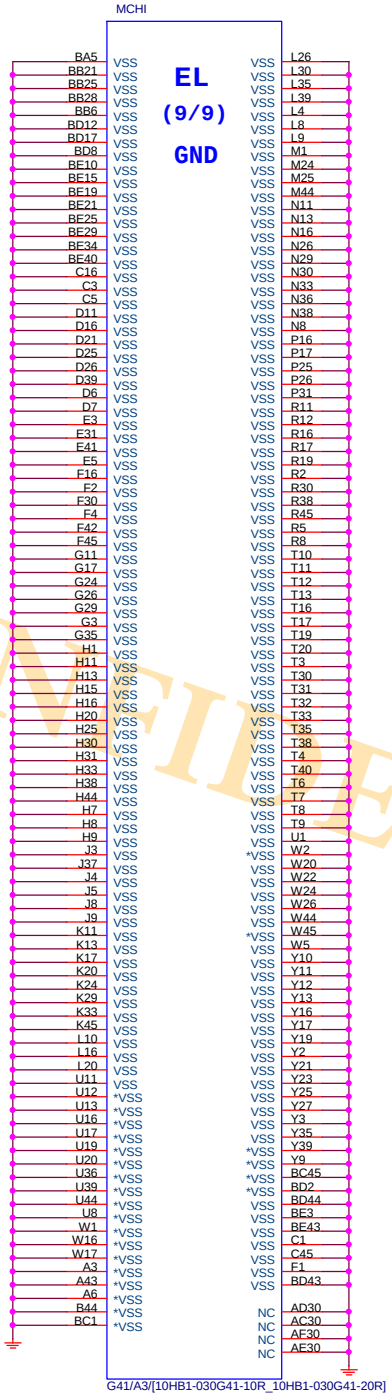

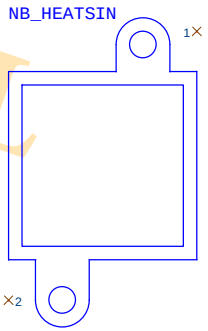

NB_HS

NB_HEATSINK/[12SP2-S04520-03R_12SP2-S04520-01R_12SP2-S04520-02R]

BGASINK445A-L

NEW COST DOWN

CONFIDENTIAL

Gigabyte Technology		
Title	GMCH-GND	
Size Custom	Document Number GA-G41MT-S2PT	Rev 2.12
Date: Thursday, July 12, 2012	Sheet 12 of 33	

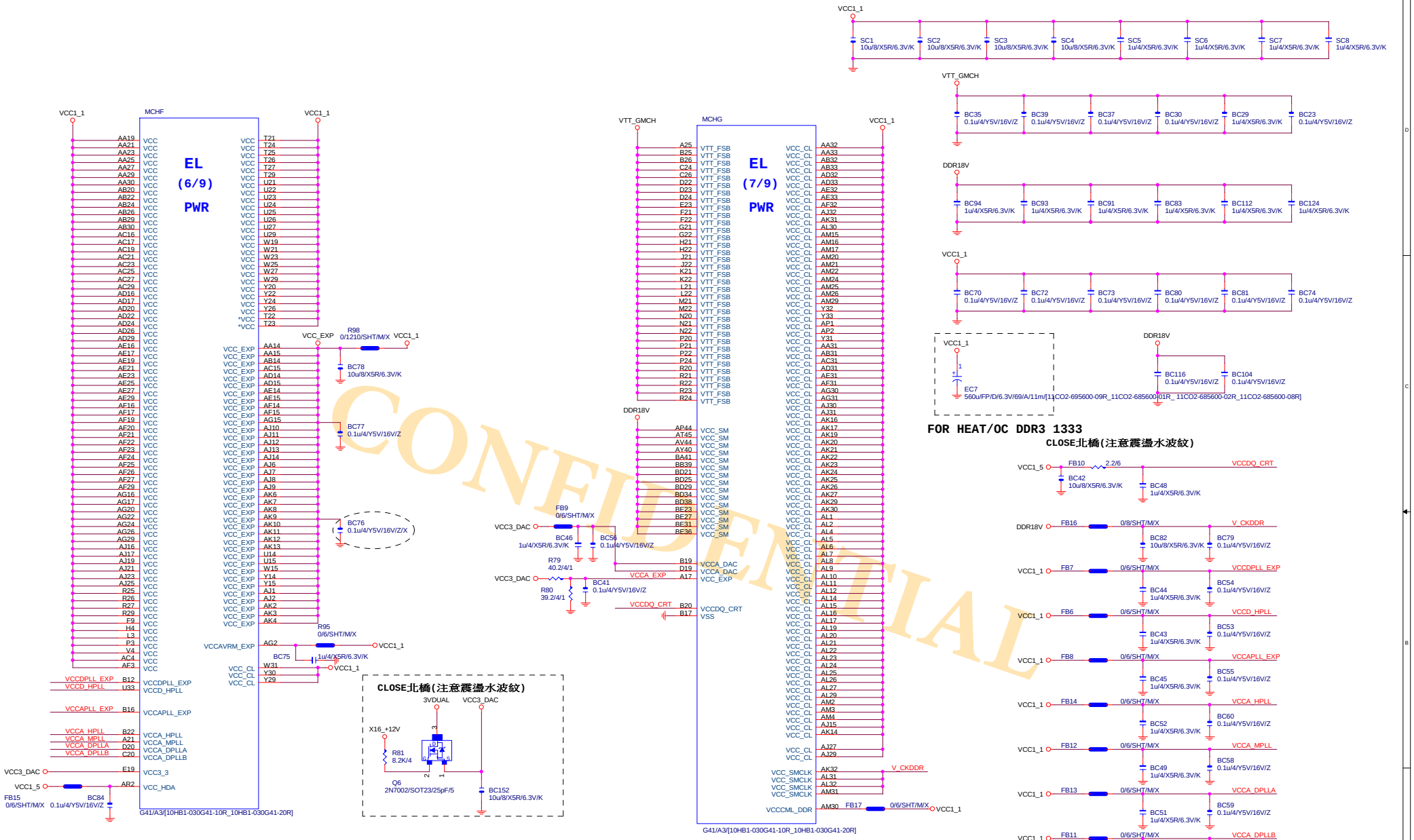

Gigabyte Technology			
Title	GMCH-PWR		
Size Custom	Document Number	GA-G41MT-S2PT	Rev 2.12
Date: Thursday, July 12, 2012	Sheet 13 of 33		

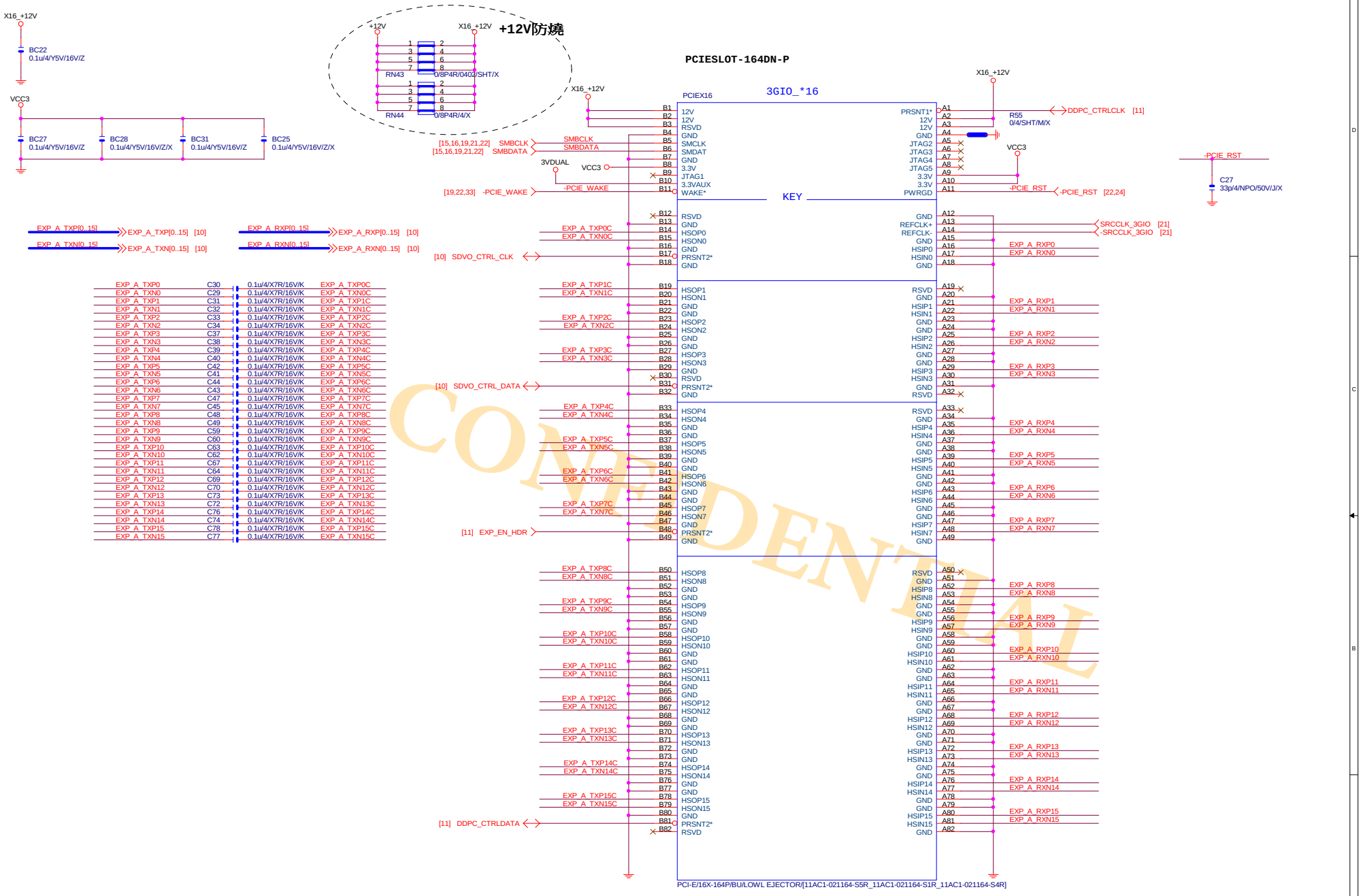

CONFIDENTIAL

Gigabyte Technology			
Title	PCI EXPRESS * 16		
Size Custom	Document Number GA-G41MT-S2PT		Rev 2.12
Date: Thursday, July 12, 2012	Sheet 14 of 33		

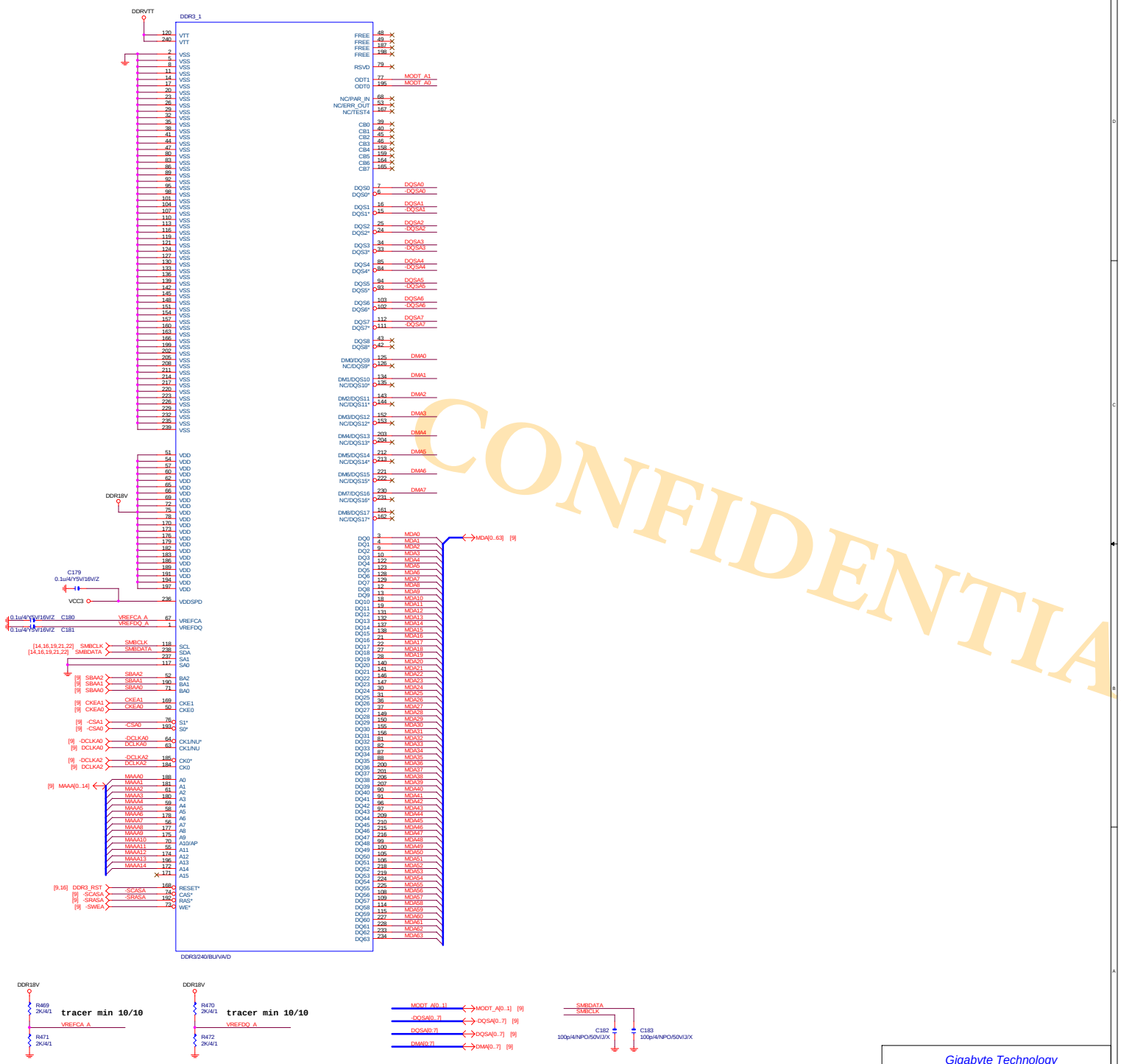

CONFIDENTIAL

Gigabyte Technology

Title: DDR3 CHANNEL A

Size: Custom | Document Number: GA-G41MT-S2PT | Rev: 2.12

Date: | Sheet 15 of 33

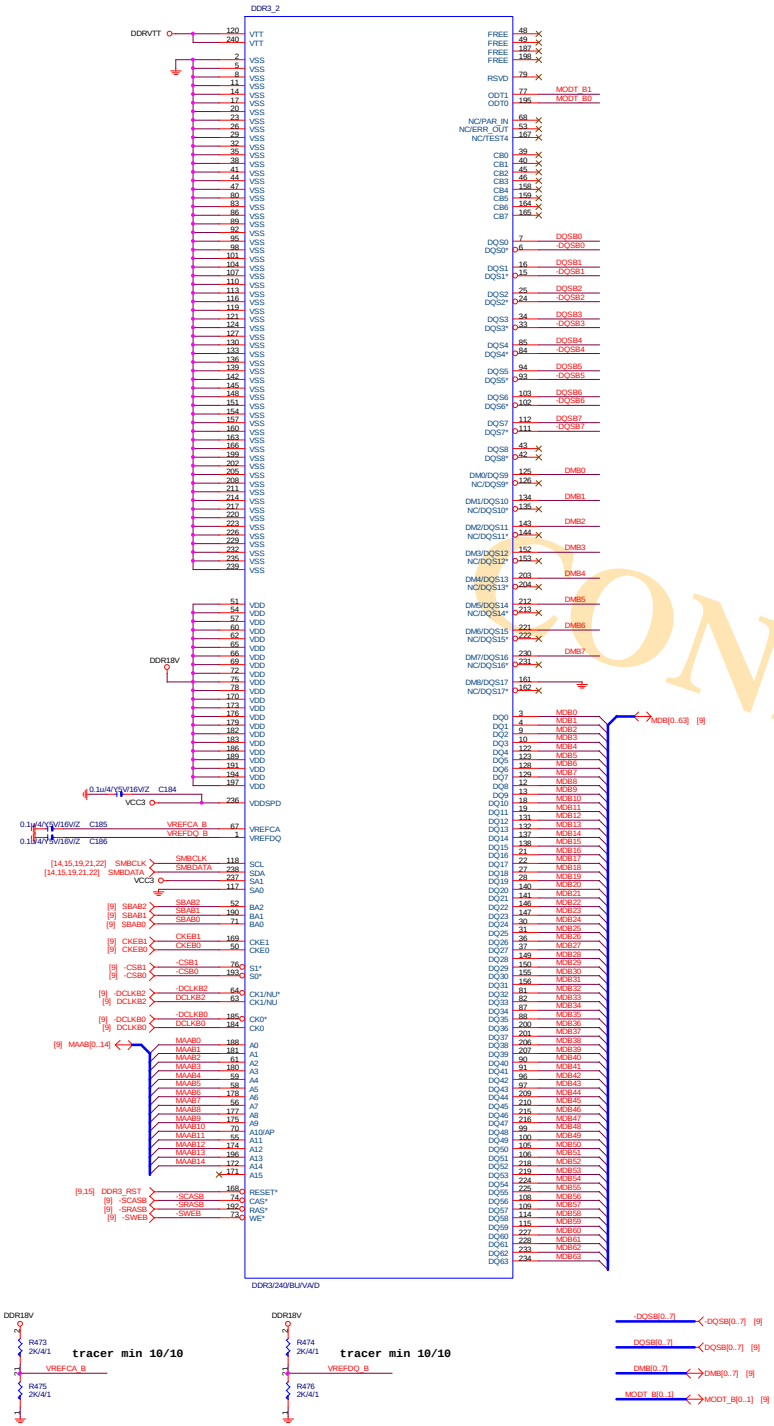

DDR18V

R473 2K/4/1 **tracer min 10/10**

VREFCA_B

R475 2K/4/1

DDR18V

R474 2K/4/1 **tracer min 10/10**

VREFDQ_B

R476 2K/4/1

-DQSB[0..7] — DQSB[0..7] [9]

DQSB[0..7] — DQSB[0..7] [9]

DMB[0..7] — DMB[0..7] [9]

MODT_B[0..1] — MODT_B[0..1] [9]

CONFIDENTIAL

Gigabyte Technology		
Title: DDR3 CHANNEL B		
Size: Custom	Document Number: GA-G41MT-S2PT	Rev: 2.12
Date:	Sheet 16 of 33	

DDR TERMINATION CHANNEL A

DDR18V Decouple

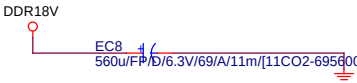

DDRVTT Decouple

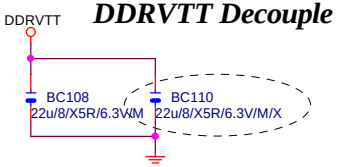

DDR18V Decouple

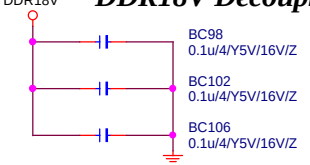

DDRVTT Decouple

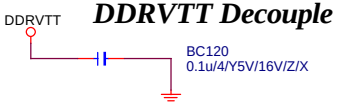

DDR TERMINATION CHANNEL B

DDR18V Decouple

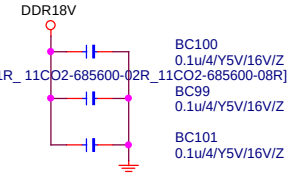

DDRVTT Decouple

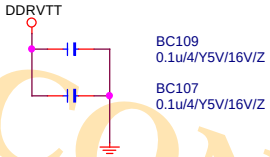

CONFIDENTIAL

Gigabyte Technology			
Title	DDRII TERMINATOR		
Size Custom	Document Number GA-G41MT-S2PT		Rev 2.12
Date: Thursday, July 12, 2012	Sheet 17 of 33		

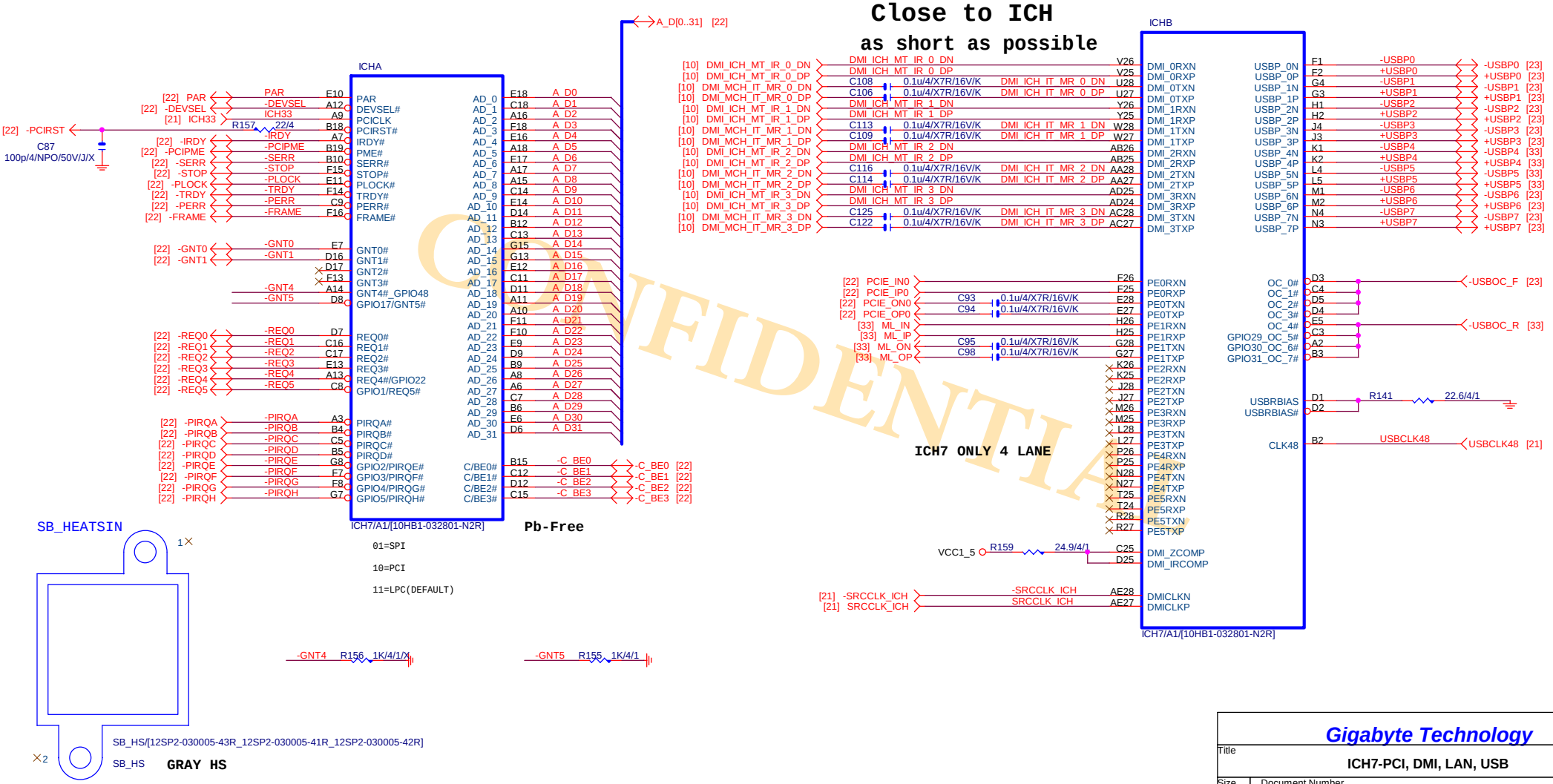

Gigabyte Technology			
Title	ICH7-PCI, DMI, LAN, USB		
Size B	Document Number GA-G41MT-S2PT		Rev 2.12
Date: Thursday, July 12, 2012	Sheet 18 of 33		

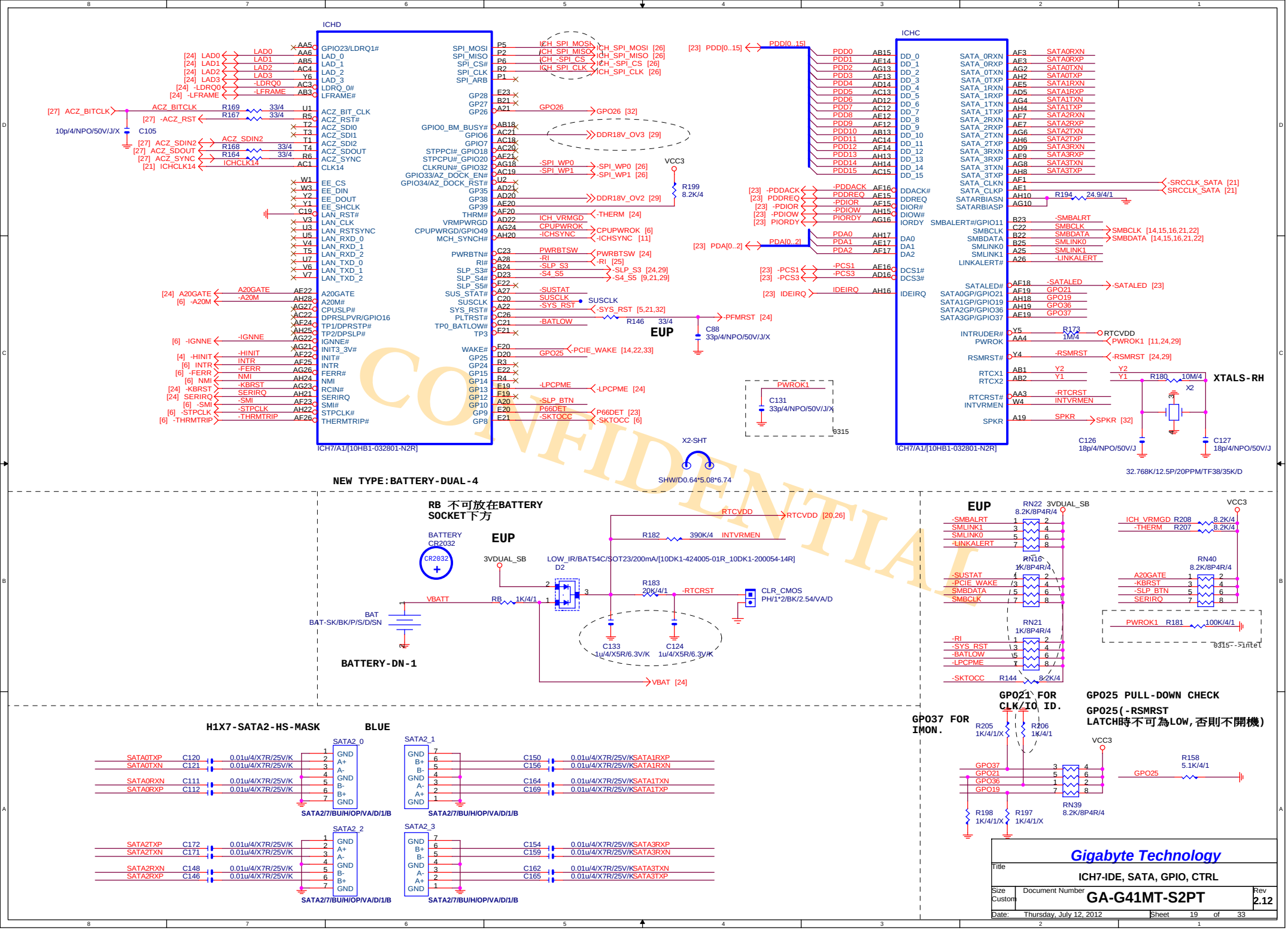

CONFIDENTIAL

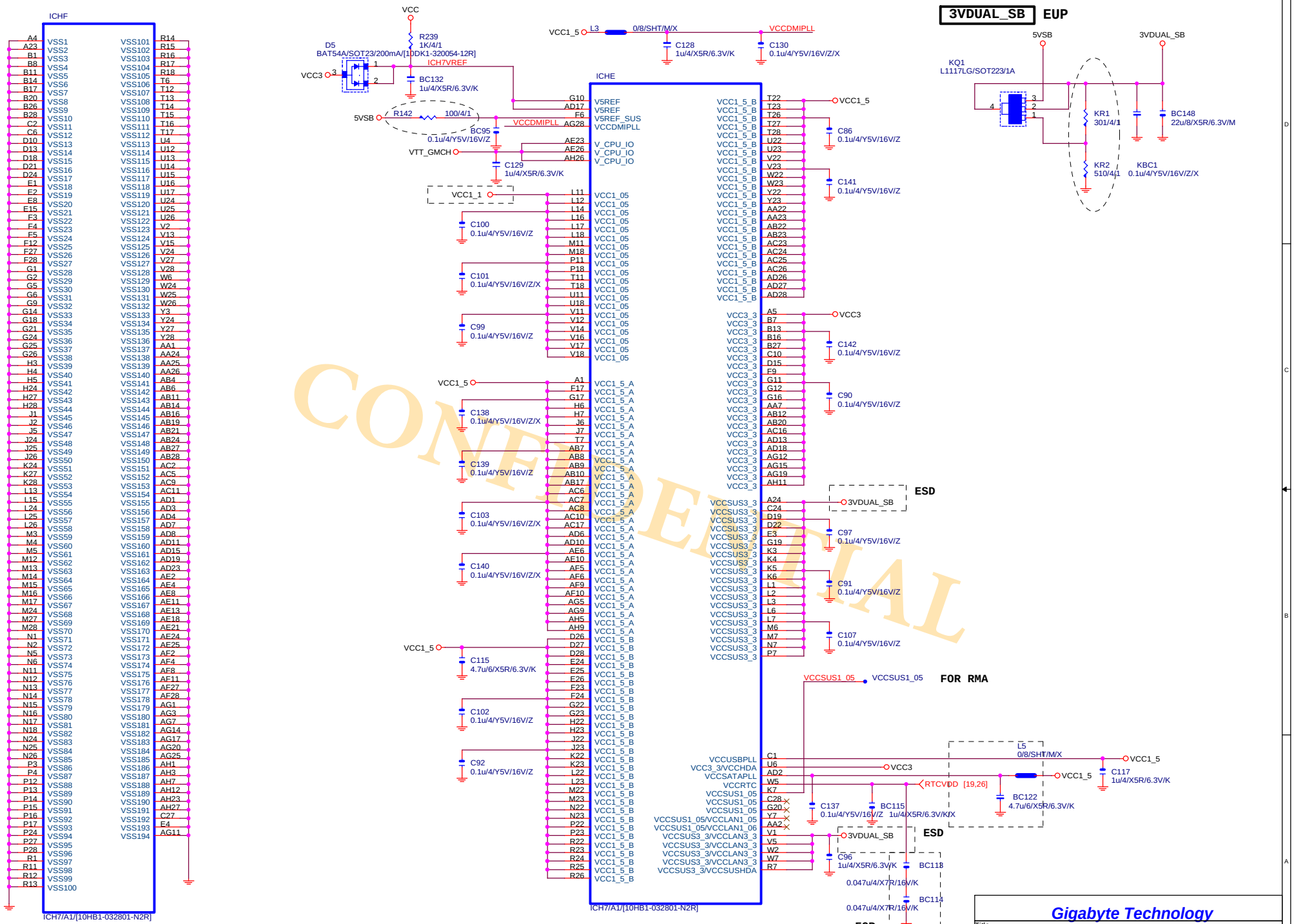

Gigabyte Technology

Title: ICH7-PWR & GND

Size: B | Document Number: GA-G41MT-S2PT | Rev: 2.12

Date: Thursday, July 12, 2012 | Sheet 20 of 33

CLK GEN CK505

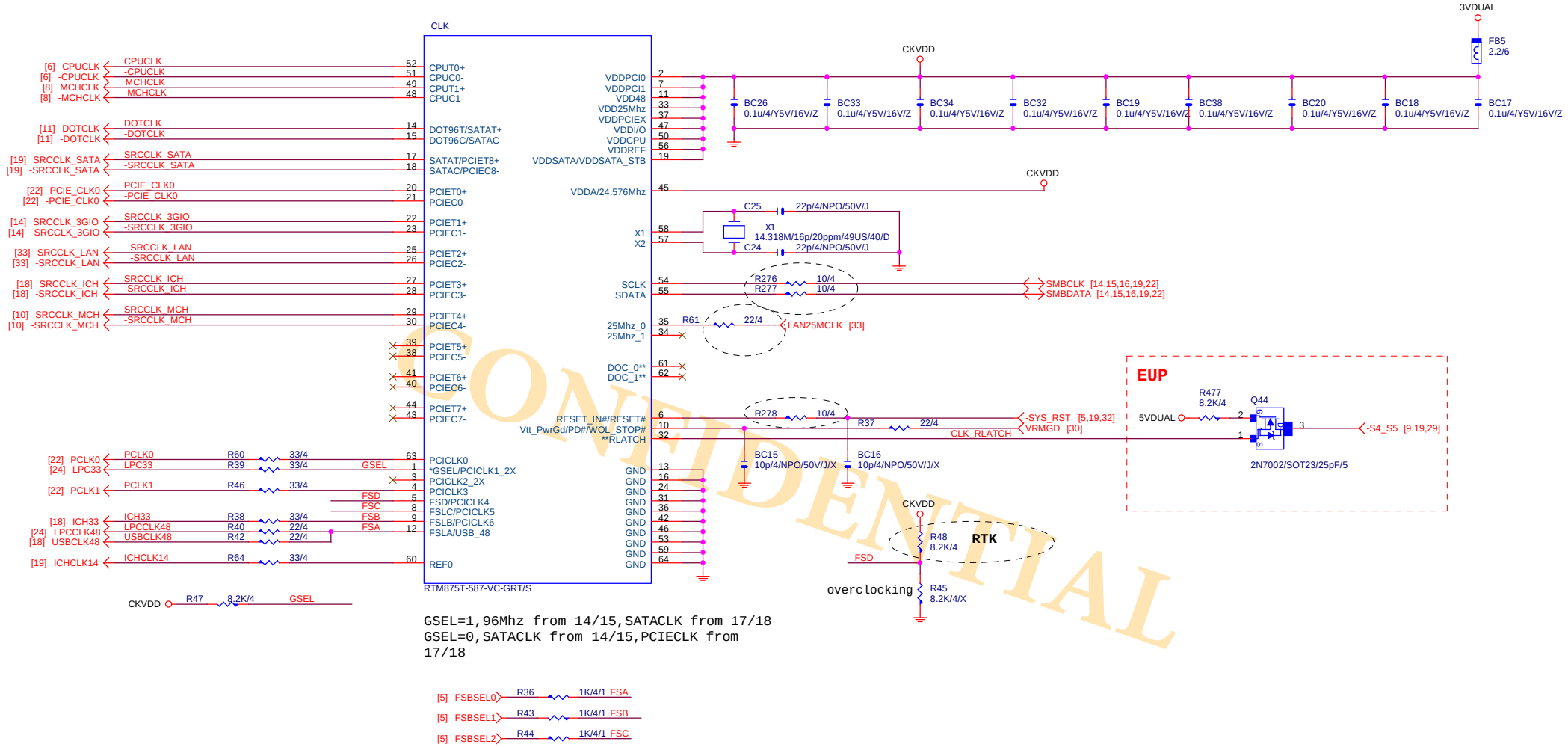

GSEL=1,96Mhz from 14/15,SATACLK from 17/18
GSEL=0,SATACLK from 14/15,PCIECLK from 17/18

CONFIDENTIAL

Gigabyte Technology			
Title	CK505 CLK GEN		
Size Custom	Document Number GA-G41MT-S2PT		Rev 2.12
Date: Thursday, July 12, 2012	Sheet 21 of 33		

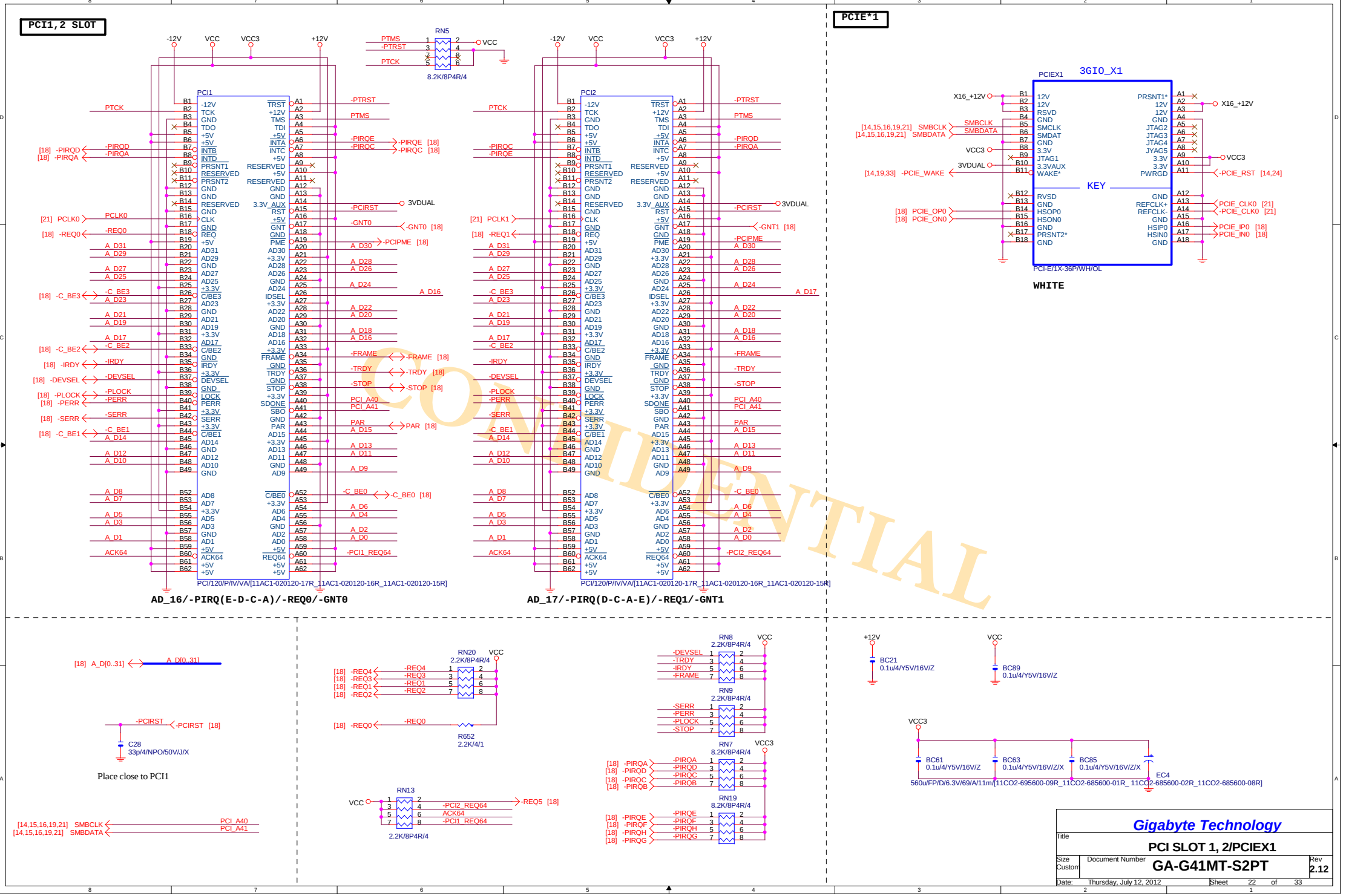

CONFIDENTIAL

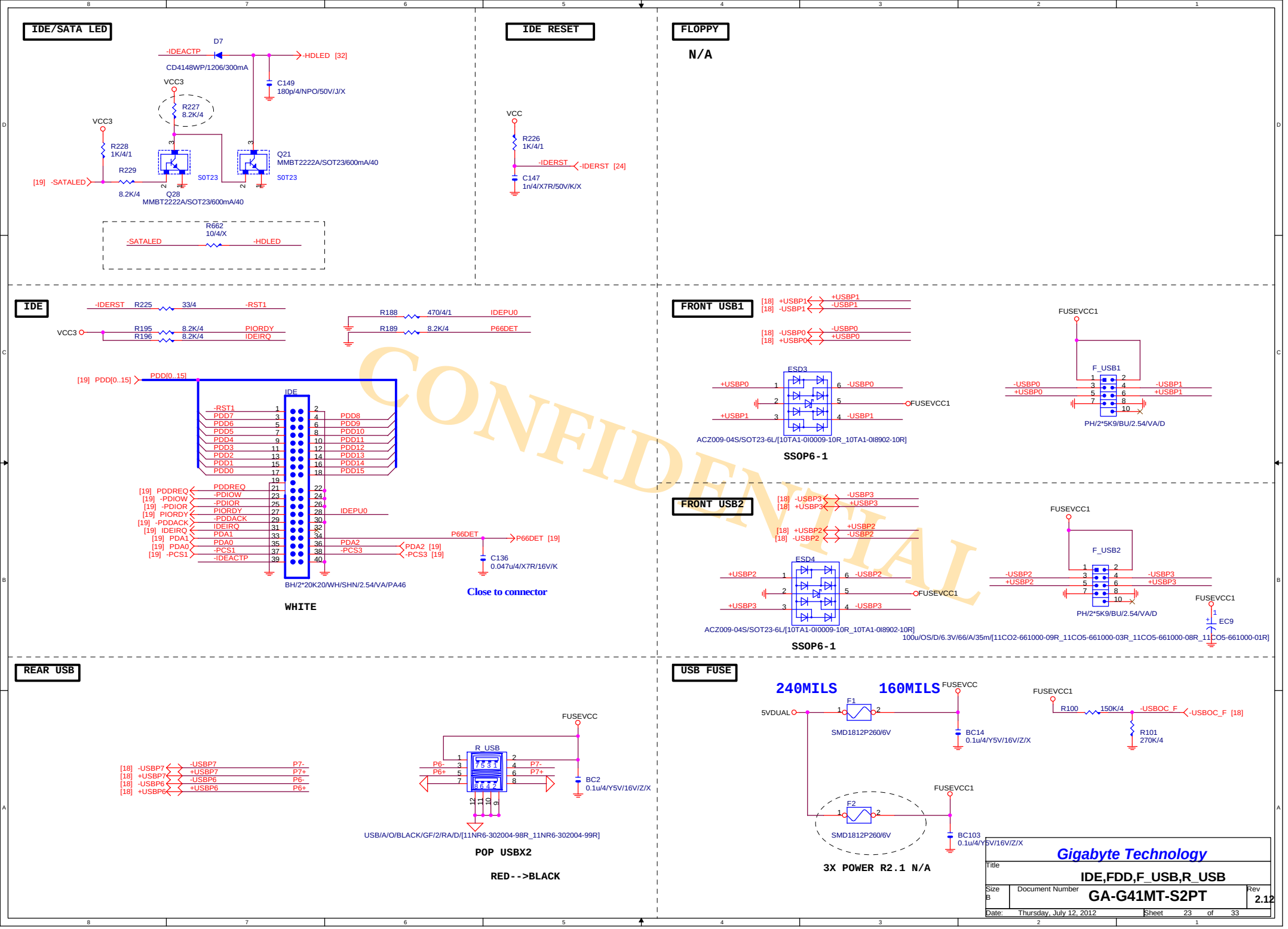
IDE/SATA LED
D7
-IDEACTP
-HDLED [32]
CD4148WP/1206/300mA
C149
180p/4/NPO/50V/J/X
VCC3
R227
8.2K/4
VCC3
R228
1K/4/1
R229
[19] -SATALED
8.2K/4
Q28
MMBT2222A/SOT23/600mA/40
S0T23
Q21
MMBT2222A/SOT23/600mA/40
S0T23
R662
10/4/X
-SATALED
-HDLED
IDE RESET
VCC
R226
1K/4/1
-IDERST
-IDERST [24]
C147
1n/4/X7R/50V/K/X
FLOPPY
N/A
IDE
-IDERST R225 33/4 -RST1
VCC3
R195 8.2K/4 PIORDY
R196 8.2K/4 IDEIRQ
R188 470/4/1 IDEPU0
R189 8.2K/4 P66DET
[19] PDD[0..15]
PDD[0..15]
IDE
-RST1
PDD7
PDD6
PDD5
PDD4
PDD3
PDD2
PDD1
PDD0
PDD8
PDD9
PDD10
PDD11
PDD12
PDD13
PDD14
PDD15
[19] PDDREQ
[19] -PDIOW
[19] -PDIOR
[19] PIORDY
[19] -PDDACK
[19] IDEIRQ
[19] PDA1
[19] PDA0
[19] -PCS1
PDDREQ
-PDIOW
-PDIOR
PIORDY
-PDDACK
IDEIRQ
PDA1
PDA0
-PCS1
-IDEACTP
IDEPU0
PDA2
-PCS3
PDA2 [19]
-PCS3 [19]
P66DET
P66DET [19]
C136
0.047u/4/X7R/16V/K
BH/2*20K20/WH/SHN/2.54/VA/PA46
WHITE
Close to connector
FRONT USB1
[18] +USBP1
[18] -USBP1
+USBP1
-USBP1
[18] -USBP0
[18] +USBP0
-USBP0
+USBP0
ESD3
+USBP0
+USBP1
-USBP0
-USBP1
FUSEVCC1
ACZ009-04S/SOT23-6L/[10TA1-0I0009-10R_10TA1-0I8902-10R]
SSOP6-1
FUSEVCC1
F_USB1
-USBP0
+USBP0
-USBP1
+USBP1
PH/2*5K9/BU/2.54/VA/D
FRONT USB2
[18] -USBP3
[18] +USBP3
-USBP3
+USBP3
[18] +USBP2
[18] -USBP2
+USBP2
-USBP2
ESD4
+USBP2
+USBP3
-USBP2
-USBP3
FUSEVCC1
ACZ009-04S/SOT23-6L/[10TA1-0I0009-10R_10TA1-0I8902-10R]
SSOP6-1
FUSEVCC1
F_USB2
-USBP2
+USBP2
-USBP3
+USBP3
PH/2*5K9/BU/2.54/VA/D
FUSEVCC1
EC9
100u/OS/D/6.3V/66/A/35m/[11CO2-661000-09R_11CO5-661000-03R_11CO5-661000-08R_11CO5-661000-01R]
REAR USB
[18] -USBP7
[18] +USBP7
[18] -USBP6
[18] +USBP6
-USBP7
+USBP7
-USBP6
+USBP6
P7-
P7+
P6-
P6+
FUSEVCC
R_USB
P6-
P6+
P7-
P7+
BC2
0.1u/4/Y5V/16V/Z/X
USB/A/O/BLACK/GF/2/RA/D/[11NR6-302004-98R_11NR6-302004-99R]
POP USBX2
RED-->BLACK
USB FUSE
240MILS
160MILS
FUSEVCC
5VDUAL
F1
SMD1812P260/6V
BC14
0.1u/4/Y5V/16V/Z/X
FUSEVCC1
R100
150K/4
-USBOC_F
-USBOC_F [18]
R101
270K/4
FUSEVCC1
F2
SMD1812P260/6V
BC103
0.1u/4/Y5V/16V/Z/X
3X POWER R2.1 N/A
CONFIDENTIAL
Gigabyte Technology
Title
IDE,FDD,F_USB,R_USB
Size
B
Document Number
GA-G41MT-S2PT
Rev
2.12
Date: Thursday, July 12, 2012
Sheet 23 of 33

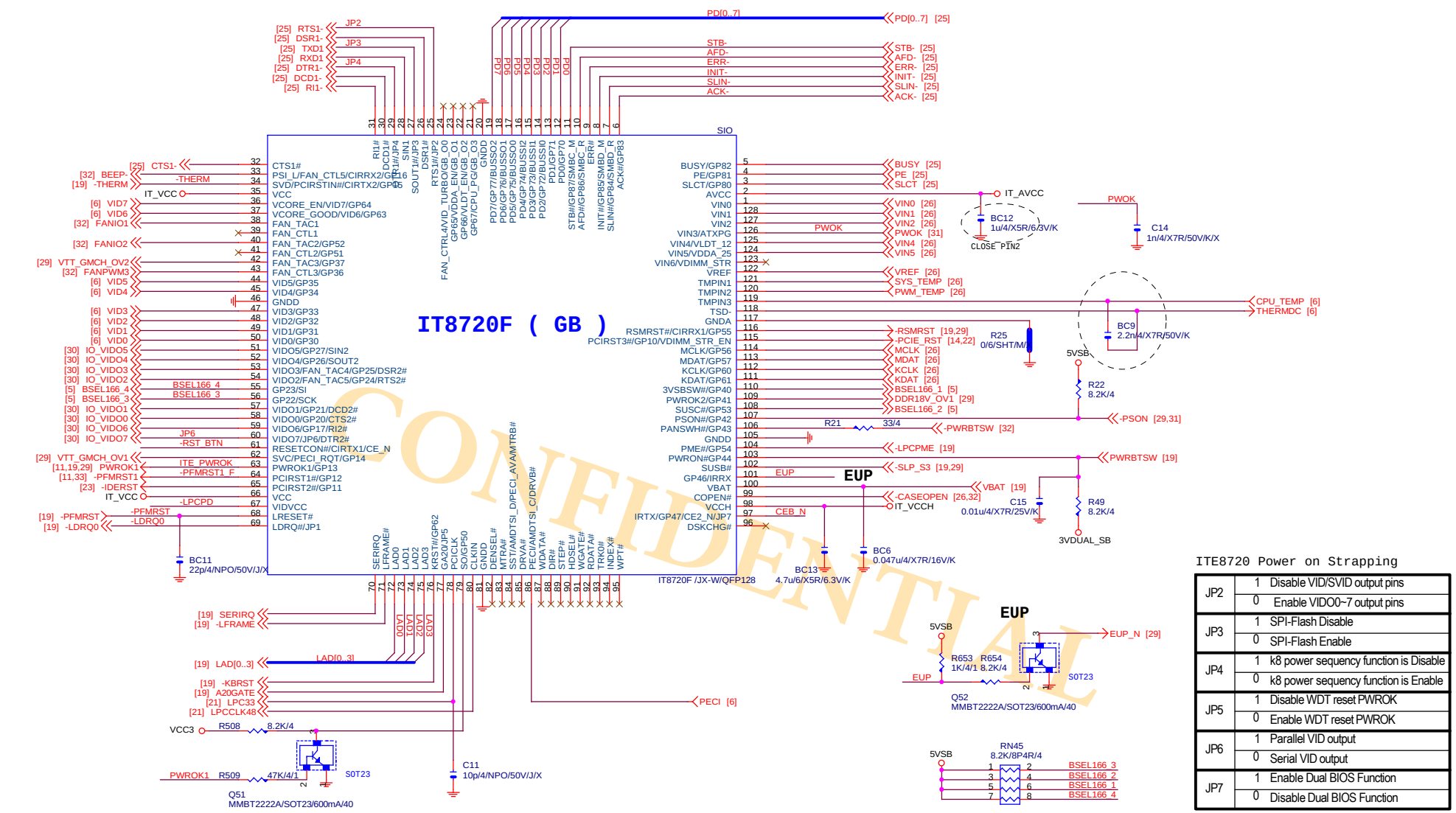

ITE8720 Power on Strapping

JP2	1	Disable VID/SVID output pins
	0	Enable VIDO0~7 output pins
JP3	1	SPI-Flash Disable
	0	SPI-Flash Enable
JP4	1	k8 power sequency function is Disable
	0	k8 power sequency function is Enable
JP5	1	Disable WDT reset PWROK
	0	Enable WDT reset PWROK
JP6	1	Parallel VID output
	0	Serial VID output
JP7	1	Enable Dual BIOS Function
	0	Disable Dual BIOS Function

Gigabyte Technology

Title: ITE 8720 LPC IO

Size: B | Document Number: GA-G41MT-S2PT | Rev: 2.12

Date: Thursday, July 12, 2012 | Sheet 24 of 33

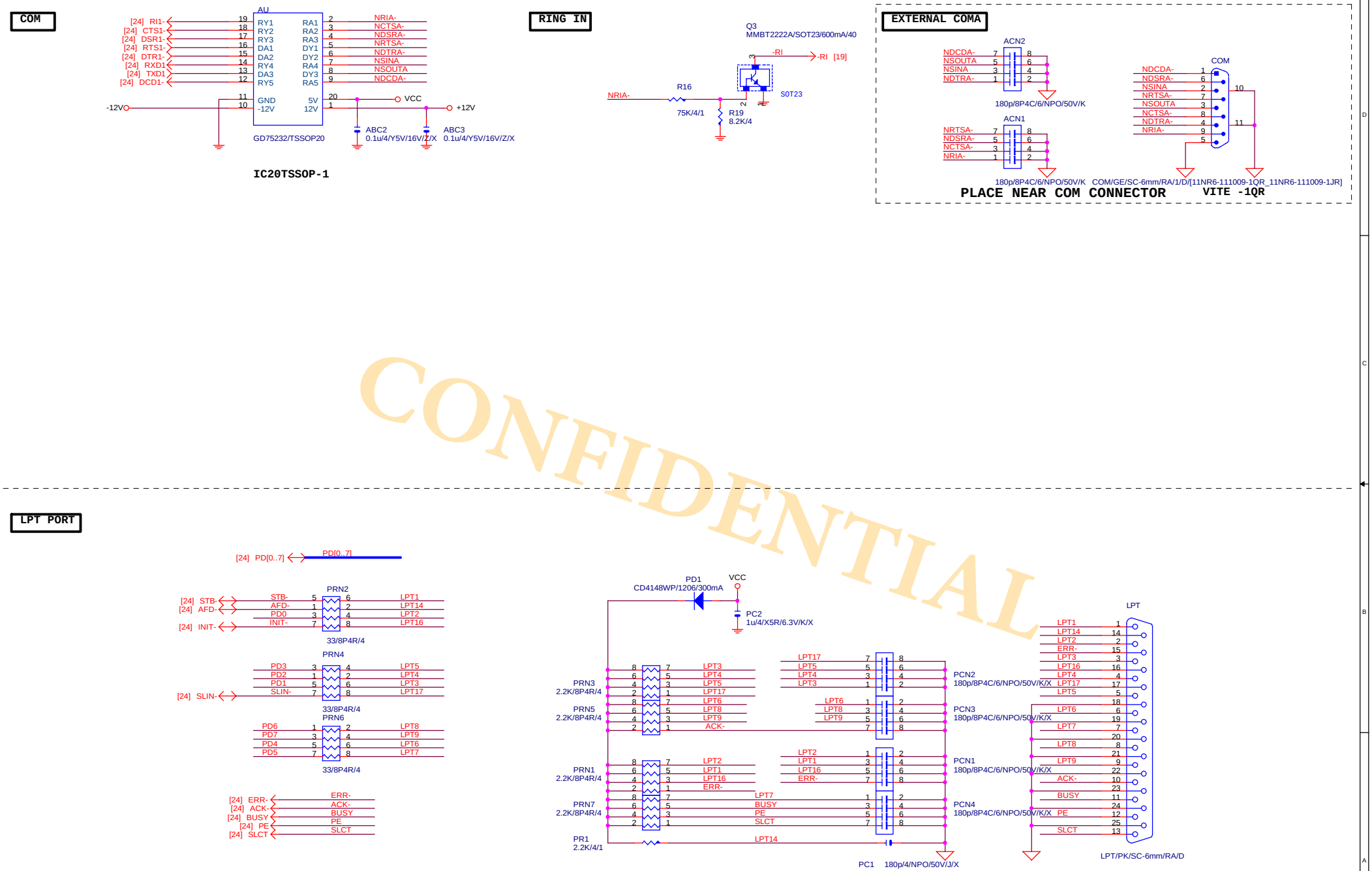

CONFIDENTIAL

Gigabyte Technology		
Title	COM & LPT PORT	
Size B	Document Number GA-G41MT-S2PT	Rev 2.12
Date: Thursday, July 12, 2012	Sheet 25 of 33	

TEMP H/W MONITOR

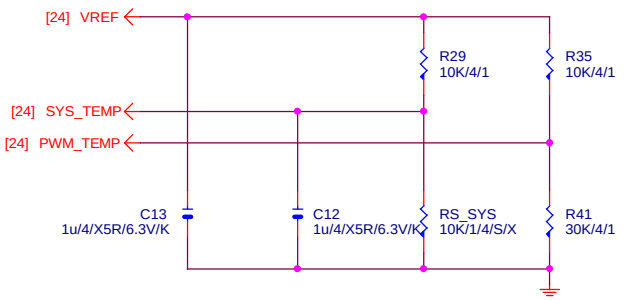

VOLTAGE-- H/W MONITOR

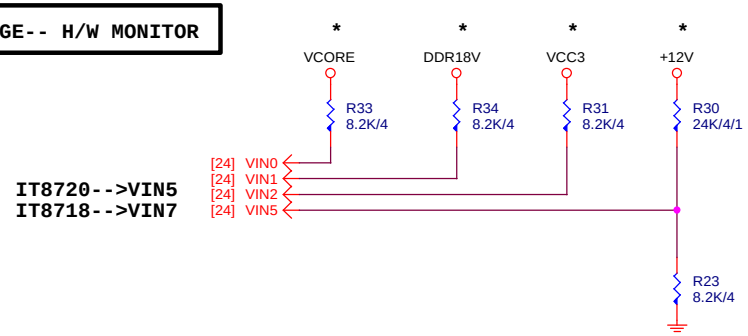

CASE OPEN

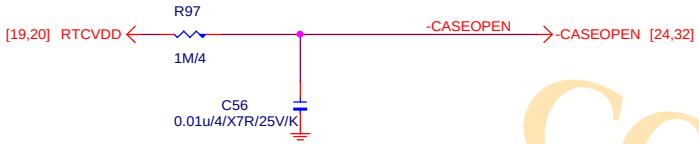

Case Open Circuits

DUAL BIOS

(NEW HOLD# DESIGN)

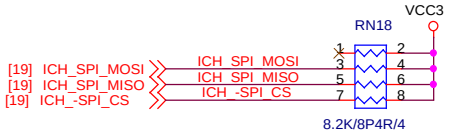

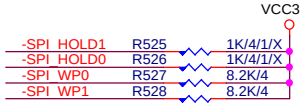

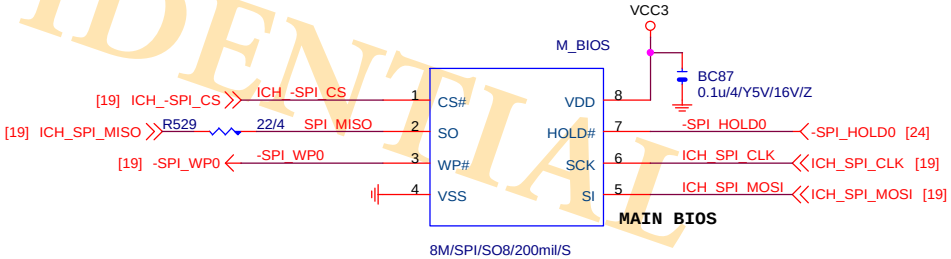

KB/MS

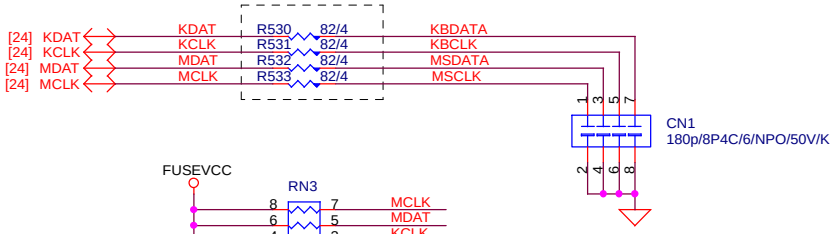

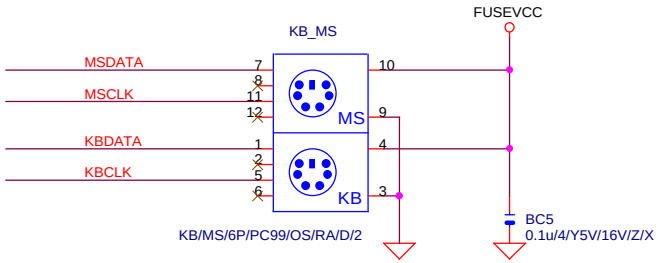

CONFIDENTIAL

Gigabyte Technology		
Title	HW-MONITOR/CI/KB/MS/BIOS	
Size Custom	Document Number GA-G41MT-S2PT	Rev 2.12
Date: Thursday, July 12, 2012	Sheet 26 of 33	

AZALIA CODEC

CO-LAY
ALC888B/ALC892R/ALC892/ALC887-VD/ALC889
VT1708S/VT2021

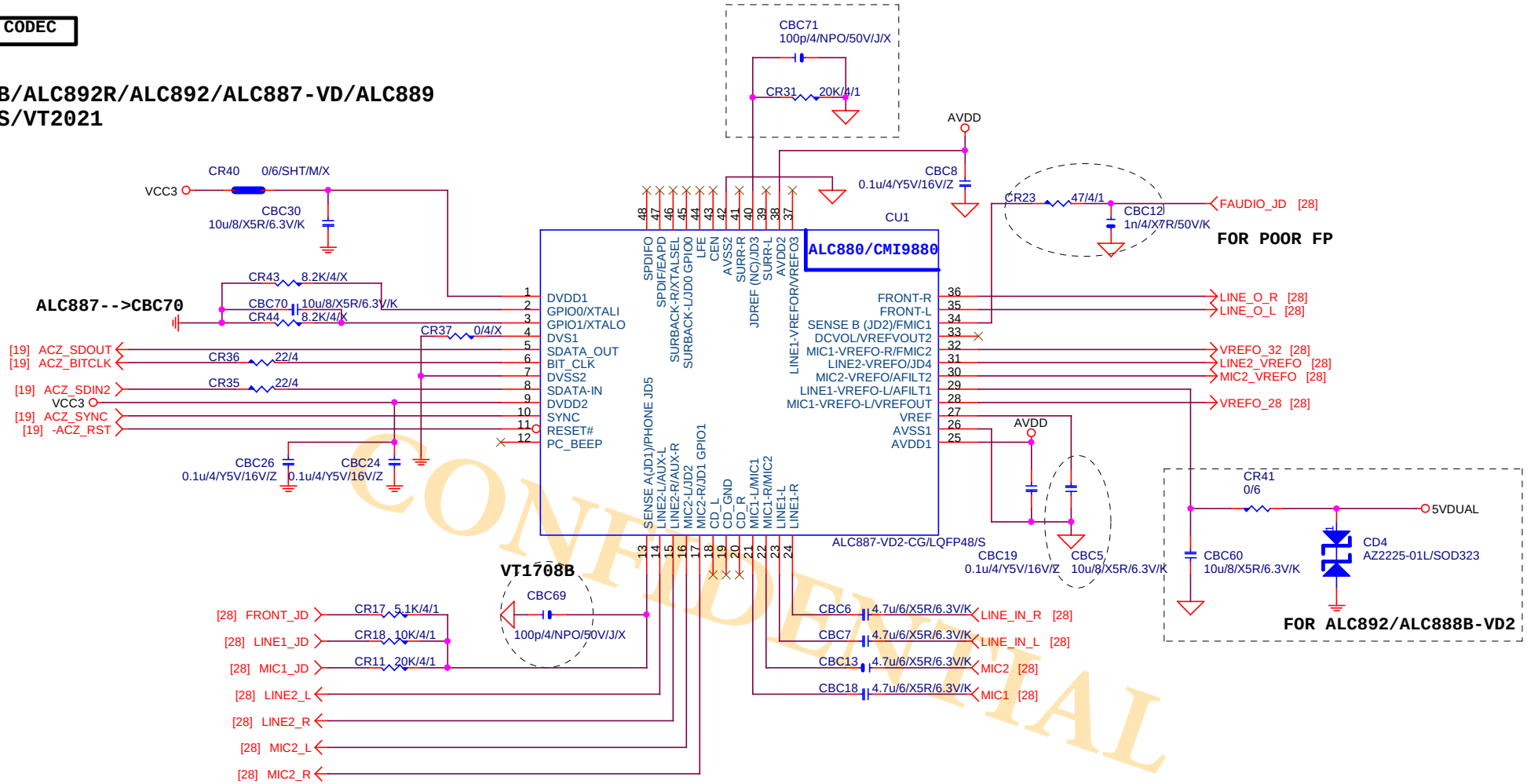

Can Support Amp Out

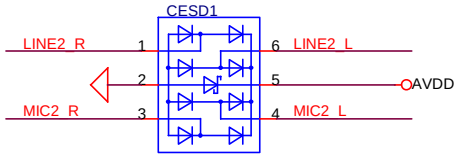

ACZ009-04S/SOT23-6L/[10TA1-0I0009-10R_10TA1-0I8902-10R]

SSOP6-1

CONFIDENTIAL

Gigabyte Technology			
Title	AZALIA ALC887-VD2		
Size Custom	Document Number GA-G41MT-S2PT		Rev 2.12
Date: Thursday, July 12, 2012	Sheet 27 of 33		

CODEC POWER/EMI PAD

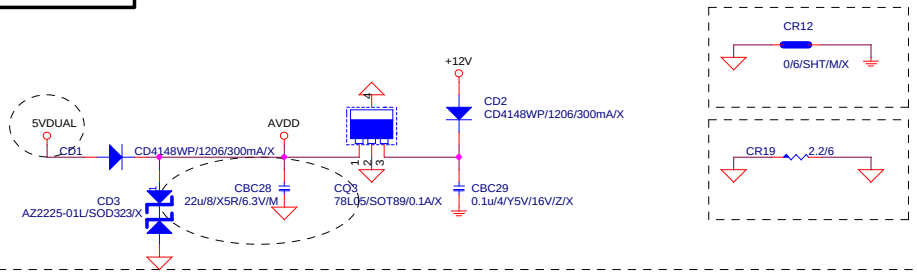

CD IN

N/A

SPDIF IN

N/A

AZALIA JACK

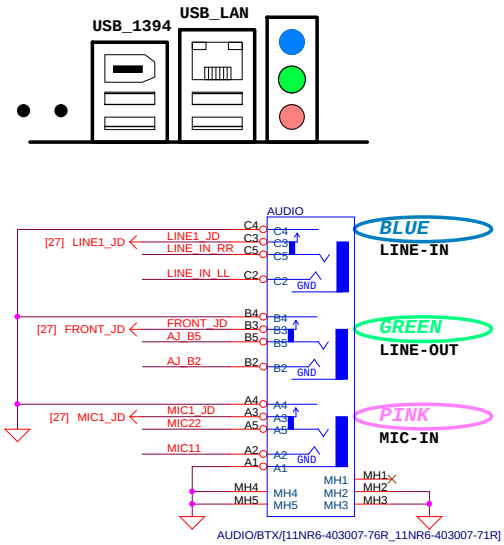

LINE-OUT

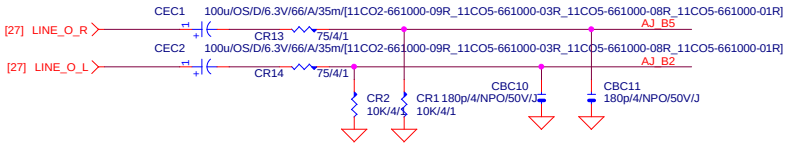

LINE-IN

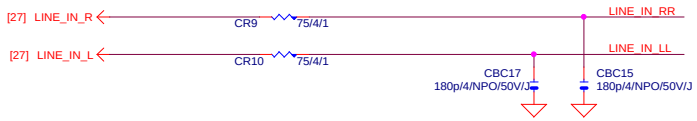

MIC-IN

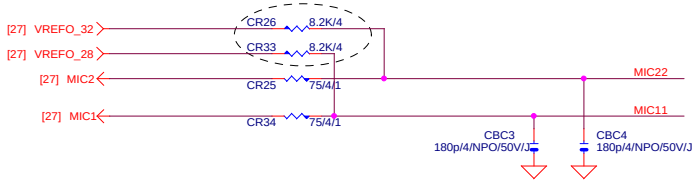

AZALIA FRONT PANEL

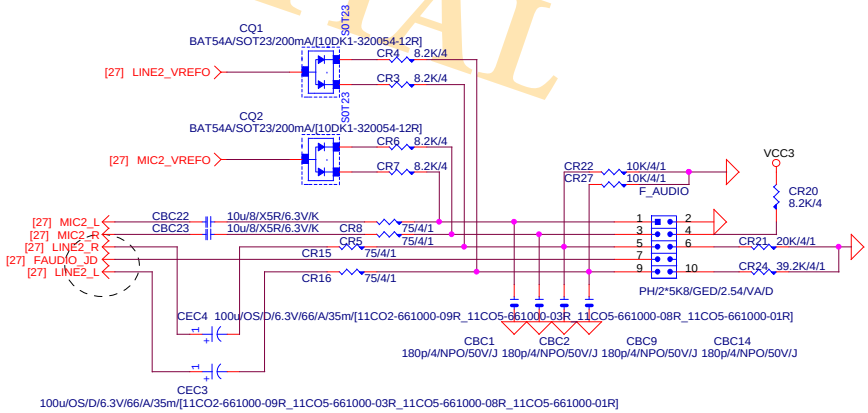

CONFIDENTIAL

Gigabyte Technology		
Title	AUDIO JACK	
Size Custom	Document Number GA-G41MT-S2PT	Rev 2.12
Date: Thursday, July 12, 2012	Sheet 28 of 33	

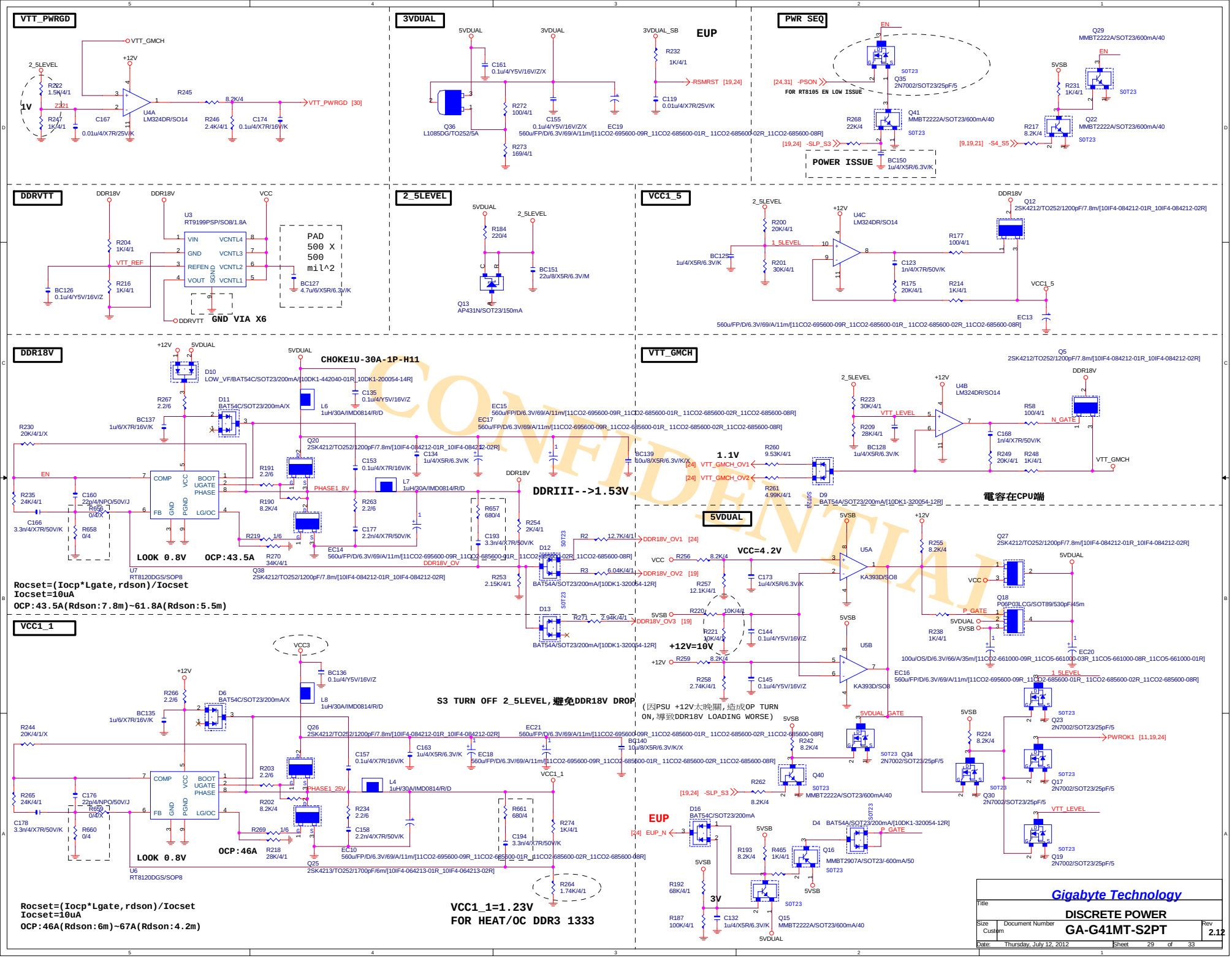
VTT_PWRGD
3VDUAL
EUP
PWR SEQ
DDRVTT
2_5LEVEL
VCC1_5
DDR18V
VTT_GMCH
5VDUAL
VCC1_1
CHOKE1U-30A-1P-H11
DDRIII-->1.53V
電容在CPUN端
S3 TURN OFF 2_5LEVEL,避免DDR18V DROP
(因PSU +12V太晚關,造成OP TURN ON,導致DDR18V LOADING WORSE)
VCC1_1=1.23V
FOR HEAT/OC DDR3 1333
LOOK 0.8V
OCP:43.5A
OCP:46A
Rocset=(Iocp*Lgate,rdson)/Iocset
Iocset=10uA
OCP:43.5A(Rdson:7.8m)~61.8A(Rdson:5.5m)
OCP:46A(Rdson:6m)~67A(Rdson:4.2m)
Gigabyte Technology
DISCRETE POWER
GA-G41MT-S2PT
2.12
Thursday, July 12, 2012
29 of 33

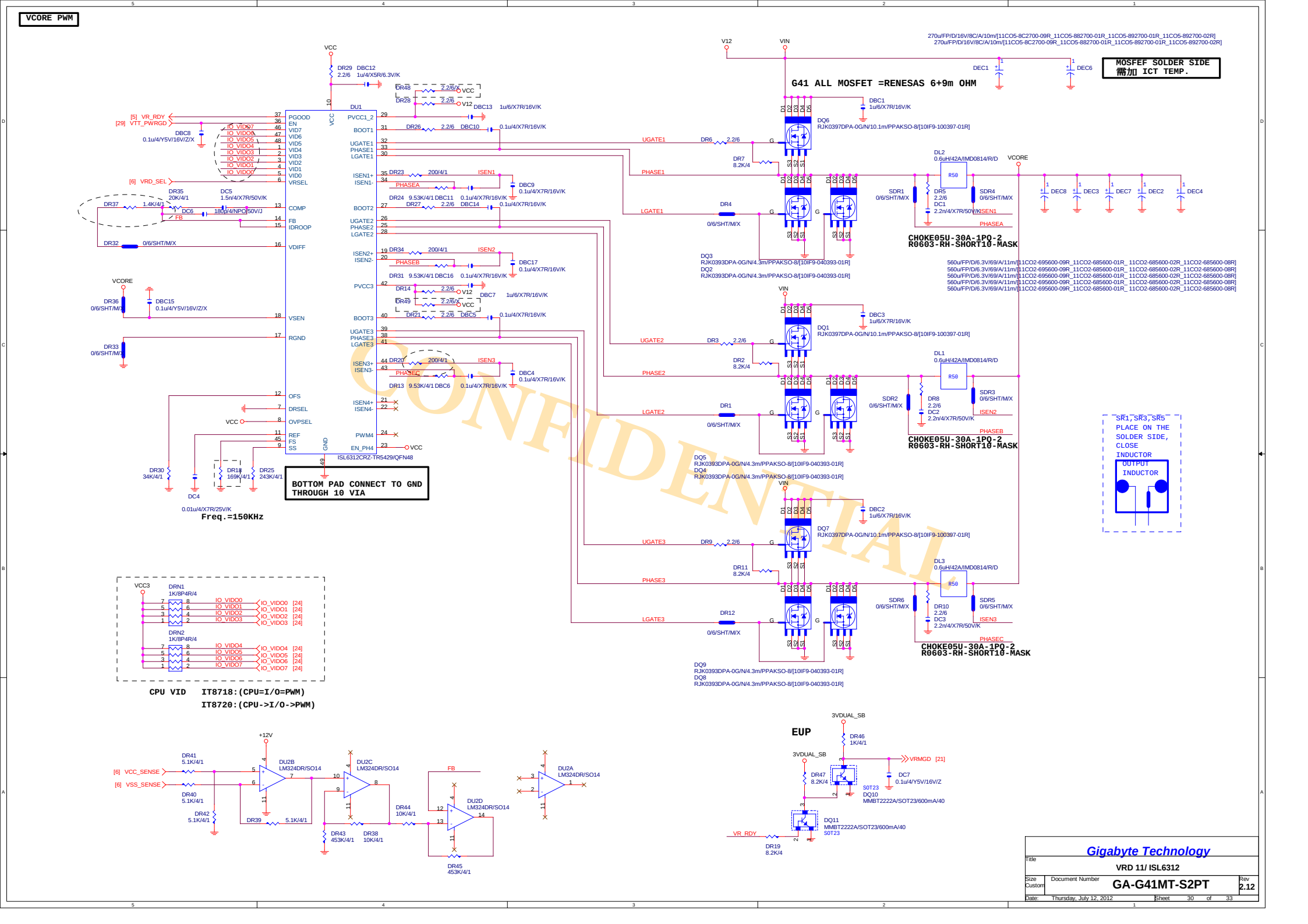
VCORE PWM
MOSFEF SOLDER SIDE
需加 ICT TEMP.
G41 ALL MOSFET =RENESAS 6+9m OHM
CHOKE05U-30A-1PQ-2
R0603-RH-SHORT10-MASK
BOTTOM PAD CONNECT TO GND
THROUGH 10 VIA
Freq.=150KHz
ISL6312CRZ-TR5429/QFN48
CPU VID IT8718:(CPU=I/O=PWM)
IT8720:(CPU->I/O->PWM)
EUP
SR1,SR3,SR5
PLACE ON THE
SOLDER SIDE,
CLOSE
INDUCTOR
OUTPUT
INDUCTOR
CONFIDENTIAL
Gigabyte Technology
Title
VRD 11/ ISL6312
Size Custom
Document Number
GA-G41MT-S2PT
Rev 2.12
Date: Thursday, July 12, 2012
Sheet 30 of 33

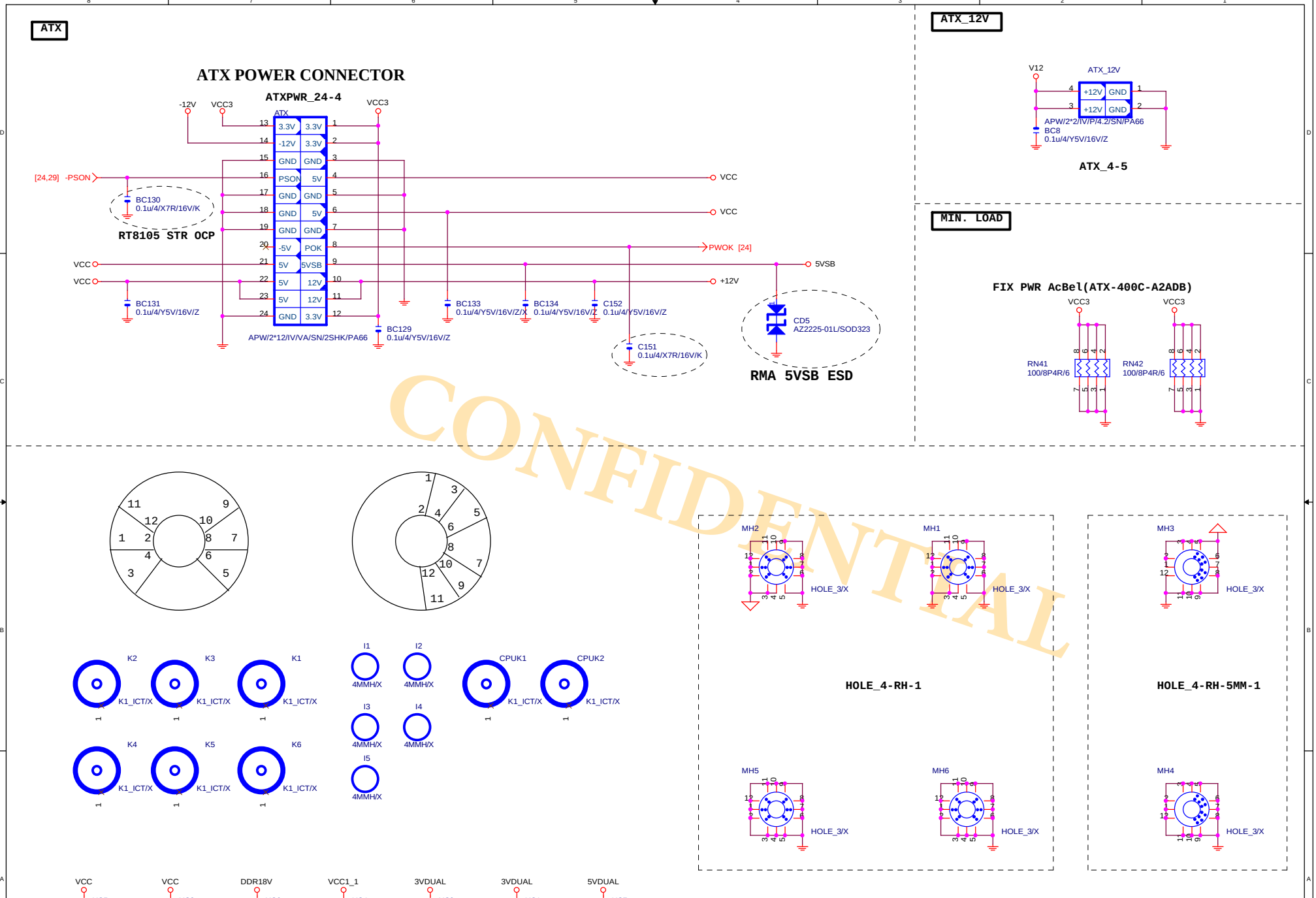
ATX
ATX POWER CONNECTOR
ATXPWR_24-4
ATX
-12V
VCC3
VCC3
[24,29] -PSON
BC130
0.1u/4/X7R/16V/K
RT8105 STR OCP
VCC
VCC
BC131
0.1u/4/Y5V/16V/Z
APW/2*12/IV/VA/SN/2SHK/PA66
BC129
0.1u/4/Y5V/16V/Z
BC133
0.1u/4/Y5V/16V/Z/X
BC134
0.1u/4/Y5V/16V/Z
C152
0.1u/4/Y5V/16V/Z
C151
0.1u/4/X7R/16V/K
PWOK [24]
5VSB
+12V
CD5
AZ2225-01L/SOD323
RMA 5VSB ESD
ATX_12V
V12
ATX_12V
APW/2*2/IV/P/4.2/SN/PA66
BC8
0.1u/4/Y5V/16V/Z
ATX_4-5
MIN. LOAD
FIX PWR AcBel(ATX-400C-A2ADB)
VCC3
VCC3
RN41
100/8P4R/6
RN42
100/8P4R/6
K2
K3
K1
K4
K5
K6
K1_ICT/X
I1
I2
I3
I4
I5
4MMH/X
CPUK1
CPUK2
MH2
MH1
MH3
MH5
MH6
MH4
HOLE_3/X
HOLE_4-RH-1
HOLE_4-RH-5MM-1
VCC
DDR18V
VCC1_1
3VDUAL
5VDUAL
XC5
XC3
XC6
XC4
XC2
XC1
XC7
VCC3
VCC1_1
+12V
0.01u/4/X7R/25V/K/X
CONFIDENTIAL
Gigabyte Technology
Title
ATX POWER CONNECTOR
Size
Custom
Document Number
GA-G41MT-S2PT
Rev
2.12
Date: Thursday, July 12, 2012
Sheet 31 of 33

CPU SMART FAN

SMART FAN

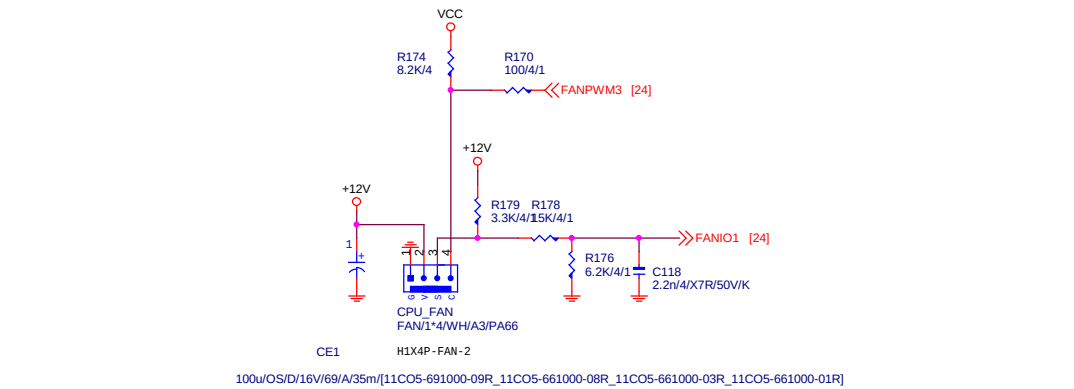

PROCESSOR HOT

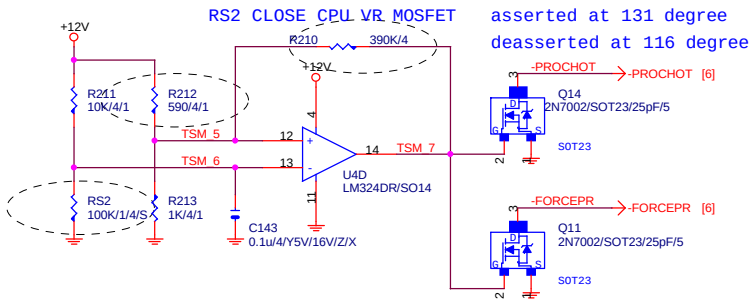

INTEL FRONT PANEL

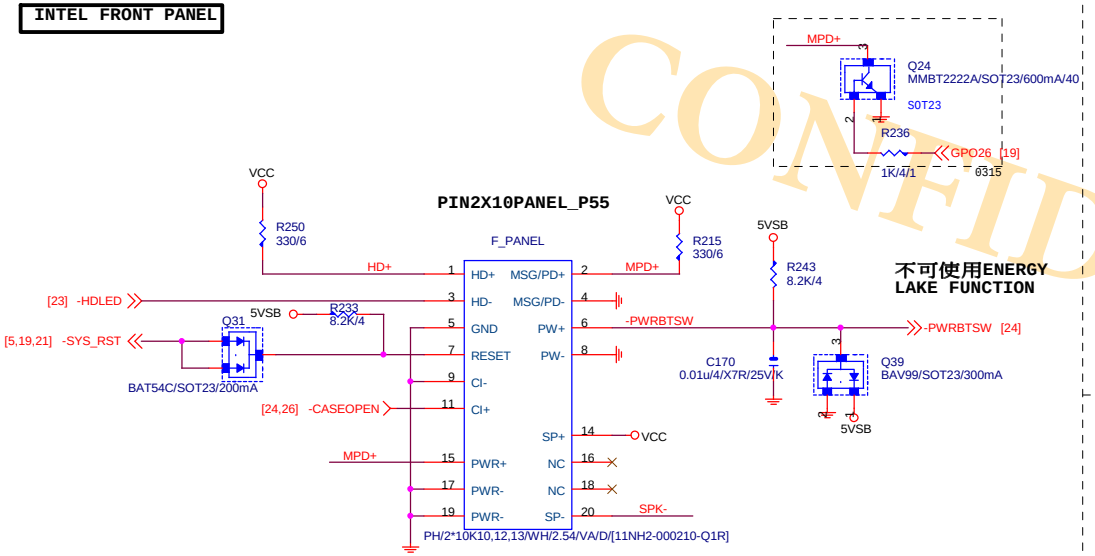

不可使用ENERGY LAKE FUNCTION

SYS_FAN

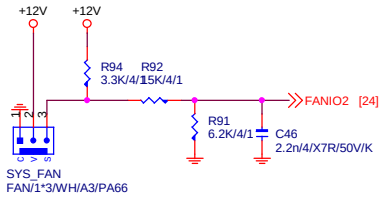

BUZZER

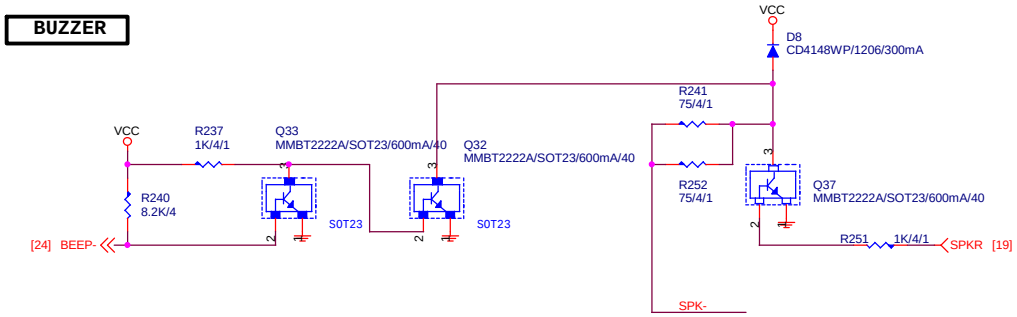

CONFIDENTIAL

Gigabyte Technology		
Title	FRONT PANEL	
Size Custom	Document Number GA-G41MT-S2PT	Rev 2.12
Date: Thursday, July 12, 2012	Sheet 32 of 33	

PCIE-1G LAN

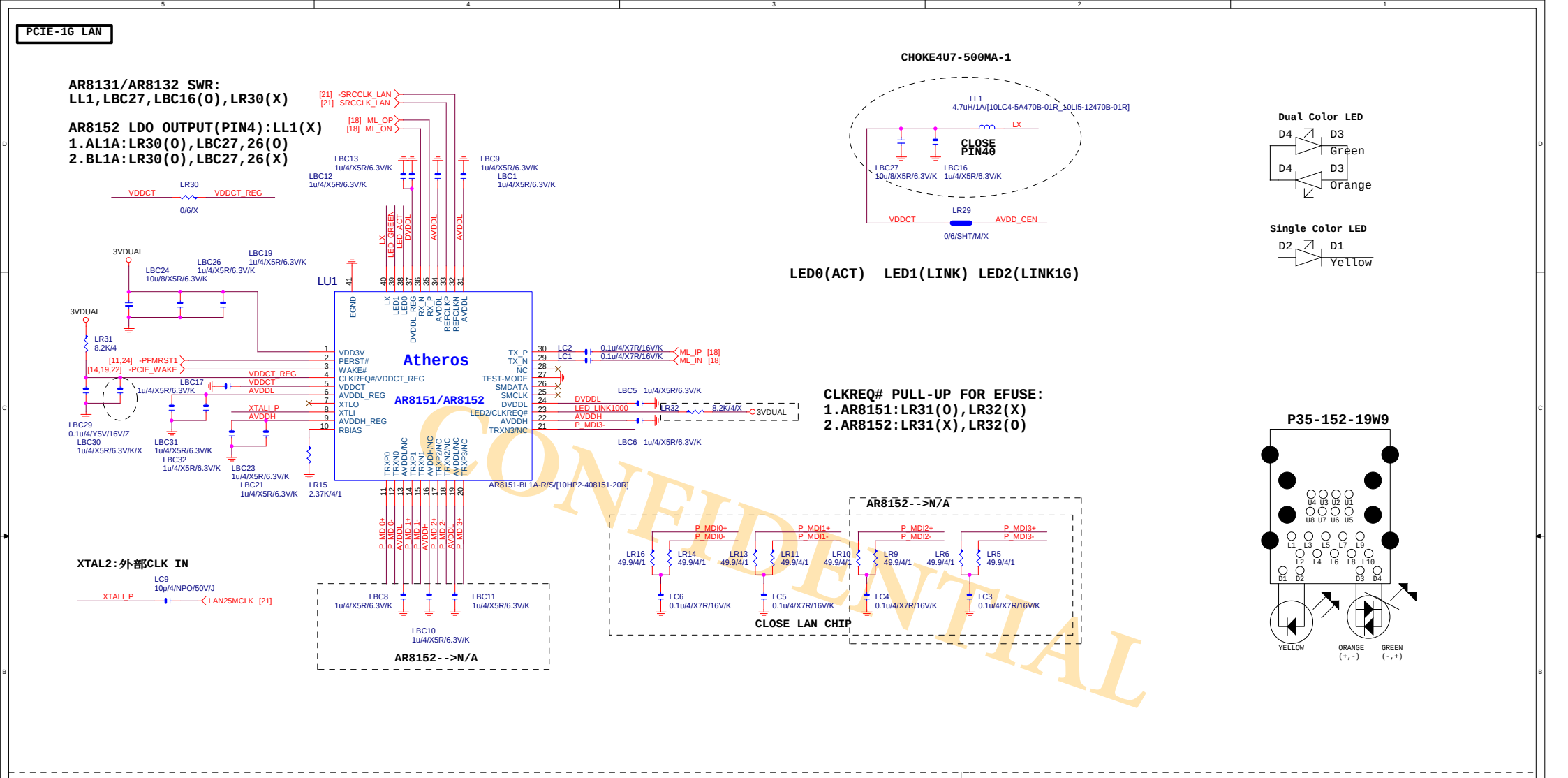

USB_LAN CONNECTOR

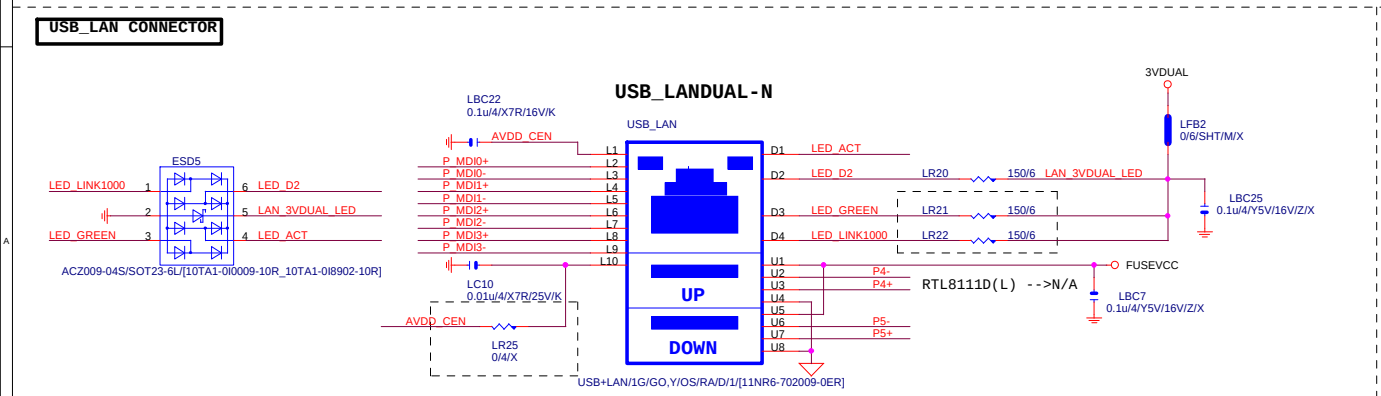

USB_LAN

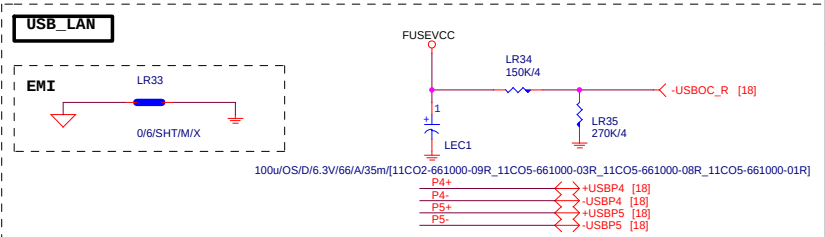

Title	REALTEK RTL8111R/RTL8105E	
Size Custom	Document Number GA-G41MT-S2PT	Rev 2.12
Date: Thursday, July 12, 2012	Sheet 33 of 33	

Gigabyte Technology